9. Exploded View & Assembly Parts List

Update on March 03. 2004

Contents

9.1 Main Exploded View
9.2 Cover Front Exploded View
9.3 Cover Top Exploded View
9.4 Cover Deve Exploded View
9.5 Exit Ass'y Exploded View
9.6 Duplex Ass'y Exploded View
9.7 Deve-Drive Ass'y Exploded View
9.8 Main-Drive Ass'y Exploded View
9.9 Fuser Ass'y Exploded View
9.10. Cassette Ass'y Exploded View
9.11. SCF Cassette Ass'y Exploded View
9.12. Frame SCF Ass'y Exploded View
9.13 Main Frame Exploded View
9.14 Front Frame Exploded View
9.15 Rear Frame Exploded View
9.16 Base Frame Exploded View
9.17 MP Ass'y Exploded View
9.18 Pick-up Ass'y Exploded View
9.19 FeederAss'y Exploded View
9.20 Guide Paper Exploded View
9.21 ITB Cam Ass'y Exploded View
9.22 Dummy Fuser Base Ass'y Exploded View

* The figures in this chapter illustrate the major subassemblies in the printer and their component parts. A table accompanies each exploded view diagram. Each table lists the item number for the replaceable part, the associated part number for the item, the quantity, and a description of the part.

* While looking for an electrical part number, pay careful attention to the voltage listed in the remark column to ensure that the part number selected is for the correct model of the printer.

IT-Spares.eu

Screws Used in the Printer

The screws listed in the table below are used in this printer. Please ensure that, when you disassemble the printer, you keep a note of which screw is used for which part and that, when reassembling the printer, the correct screws are used in the appropriate places.

NO	DESCRIPTION	SEC CODE	SPEC
S1	SCREW-MACHINE	6001-000485	2.6*4, GOLD
S2	SCREW-TAPPING	6002-000115	4*15, GOLD
S3	SCREW-TAPPING	6002-000175	3*8, GOLD
S4	SCREW-TAPTITE	6002-000308	2.6*6, GOLD
S5	SCREW-TAPTITE	6003-000119	3*8, BLACK
S6	SCREW-TAPTITE	6003-000152	2*10, GOLD
S7	SCREW-TAPTITE	6003-000179	3*6, GOLD
S8	SCREW-TAPTITE	6003-000196	3*10 SILVER
S9	SCREW-TAPTITE	6003-000266	3*6, GOLD
S10	SCREW-ASS'Y MACH	6006-001193	3*6, GOLD

NO	DESCRIPTION	SEC CODE	SPEC
S11	SCREW-TAPTITE	6003-000269	3*6, GOLD
S12	SCREW-TAPTITE	6003-001001	3*8, BLACK
S13	SCREW-MACHINE	6001-000568	3*8, SILVER
S14	SCREW-TAPTITE	6003-001256	4*10 SILVER
S15	SCREW-TAPTITE	6003-000261	3*6, GOLD
S16	SCREW-MACHINE	6003-001068	2*16, BLACK
S17	SCREW-TAPTITE	6003-000301	4*6, GOLD
S18	SCREW-SPICIAL	6009-001396	3*10, BLACK
S19	SCREW-TAPTITE	6003-000008	4*6, SILVER

IT-spares.eu

Consumables & Options

Toner Cartridge (C,M,Y,K)	ITB Unit
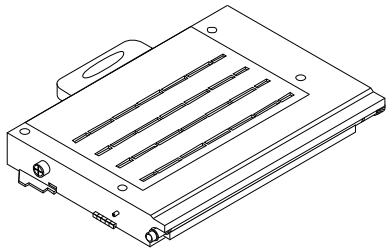	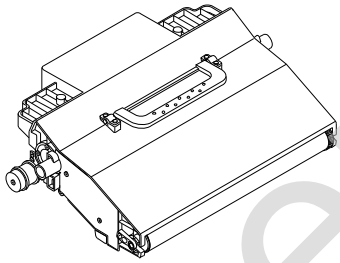
OPC Drum Cartridge	SCF
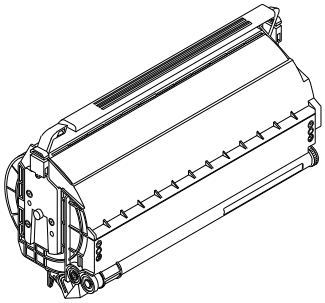	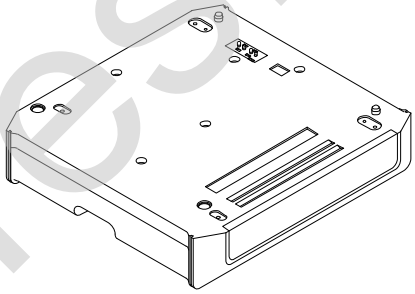
Waste Toner Tank	NIC(Network Interface Card)
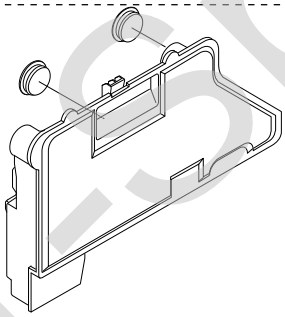	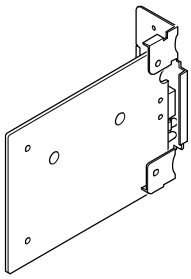
NIC(Network Interface Card) : Wireless	Memory Card
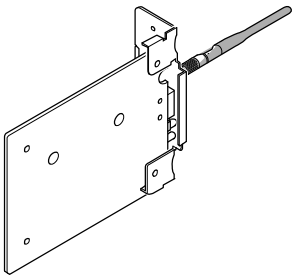	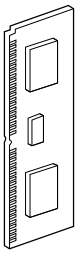

ITSpares.eu

9.1 Main Exploded View

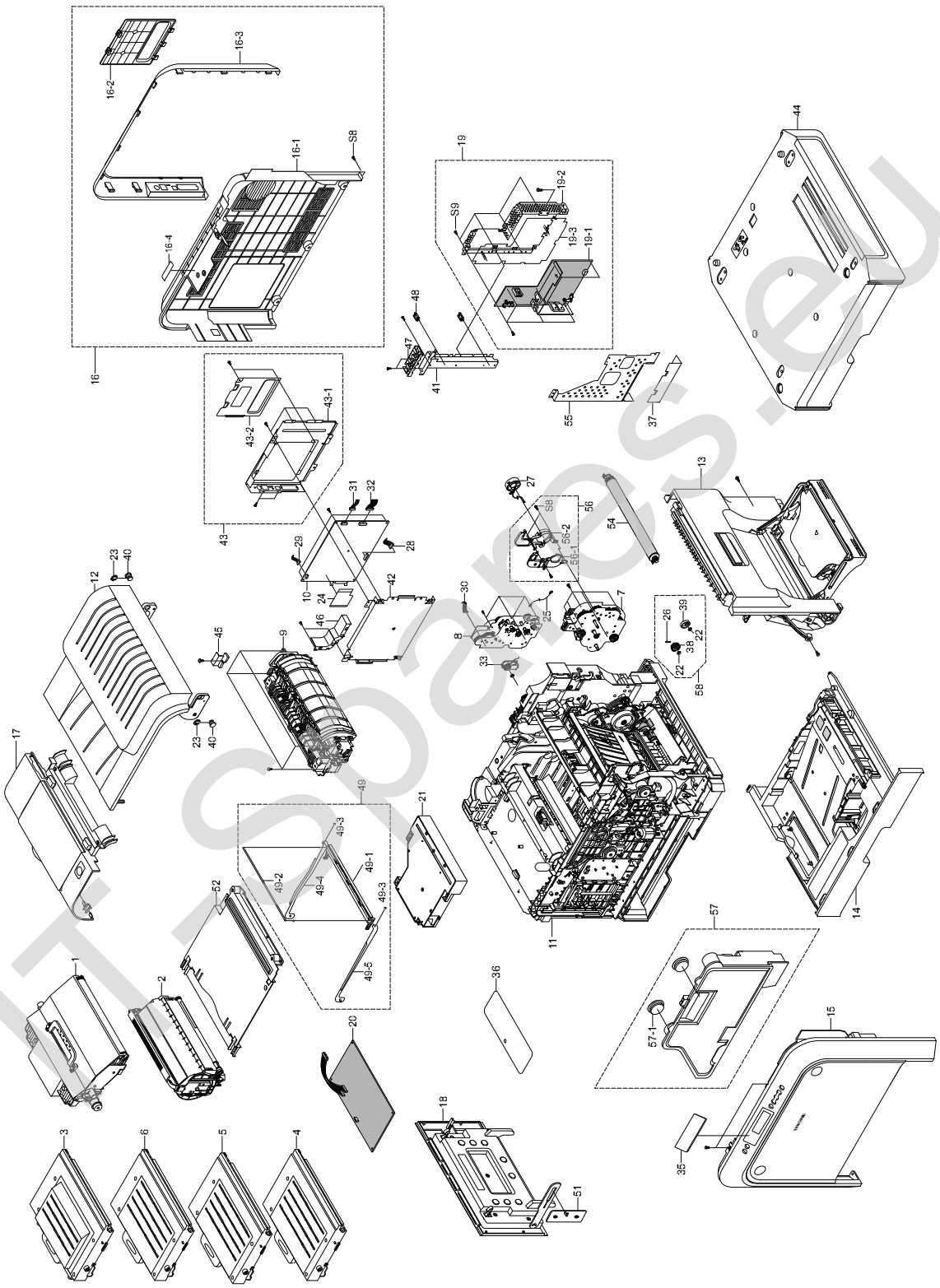

ITSpares.eu

Main Assembly Parts List

SA : Service Available
O : Service available **X** : Service not available

No.	Description	SEC.Code	Q'ty	SA	Remark
0	SET	CLP-550/CLP-550N			
1	ELA UNIT-ITB	JC96-02769A	1	O	USER CHANGE
2	ELA UNIT-OPC	JC96-02770A	1	O	USER CHANGE
3	ELA UNIT-DEVE BLACK	JC96-02765A	1	O	USER CHANGE
4	ELA UNIT-DEVE CYAN	JC96-02766A	1	O	USER CHANGE
5	ELA UNIT-DEVE MAGENTA	JC96-02767A	1	O	USER CHANGE
6	ELA UNIT-DEVE YELLOW	JC96-02768A	1	O	USER CHANGE
7	ELA UNIT-MAIN DRIVE	JC96-02771A	1	O	
8	ELA UNIT-DEVE DRIVE	JC96-02772A	1	O	
9	ELA UNIT-FUSER 230V	JC96-02773A	1	O	⚠ 230V
	ELA UNIT-FUSER 110V	JC96-02773B	1	O	⚠ 110V
10	PBA MAIN-CONTROLLER	JC92-01441H	1	O	CLP-550N
	PBA MAIN-CONTROLLER	JC92-01441G	1	O	CLP-550
11	MEA MAIN-FRAME	*	1	X	
12	MEA-EXIT	JC97-01754A	1	O	
13	MEA-DUPLEX	JC97-01756A	1	O	
14	MEA-CASSETTE	JC97-01753A		O	
15	ELA HOU-COVER FRONT	*	1	X	
16	MEA HOU-COVER REAR	JC97-01764A	1	O	
16-1	PMO-COVER REAR	JC72-01201A	1	X	
16-2	PMO-COVER REAR DECO	JC72-01202A	1	X	
16-3	PMO-COVER OPEN BOARD	JC72-01203A	1	X	
16-4	LABEL(P)-REAR	JC68-01176A	1	X	
16-S8	SCREW-TAPTITE	6003-000119	1	O	
17	MEA HOU-COVER TOP	JC97-01765A	1	O	
18	MEA HOU-COVER DEVE	JC97-01766A	1	O	
19	ELA UNIT-SMPS_230V	JC96-02875A	1	O	⚠ 230V
	ELA UNIT-SMPS_110V	JC96-02875B	1	O	⚠ 110V
19-1	SMPS-V2_230V	JC44-00056A	1	O	⚠ 230V
	SMPS-V1_110V	JC44-00055A	1	O	⚠ 110V
19-2	IPR-BRKT SMPS	JC70-00415A	1	O	
19-3	SHEET-SMPS	JC63-00236A	1	X	
19-S9	SCREW-TAPTITE	6003-000266	1	O	
20	HVPS-BIGBANG	JC44-00058A	1	O	
21	UNIT-LSU BIGBANG	JC59-00020A	1	O	
22	WASHER-PLAIN	6031-001255	2	X	
23	RING-E	6044-000125	2	X	
24	IPR BRKT GUIDE ECUC	JC70-00382A	1	X	
25	CBF HARNESS-LIU GND	JB39-00103A	1	O	
26	ICT-PIN ADF	JB70-00168A	1	X	
27	FAN-DC	JC31-00025A	1	O	
28	CBF HARNESS-MAIN LSU	JC39-00271A	1	O	
29	CBF HARNESS-MAIN_PANEL	JC39-00281A	1	O	
30	CBF HARNESS-DEVE_MOTOR	JC39-00287A	1	O	
31	CBF HARNESS-MAIN_MOTOR	JC39-00293A	1	O	
32	CBF HARNESS-MAIN_SMPS	JC39-00296A	1	O	

ITSpares.eu

Main Assembly Parts List

SA : Service Available
O : Service available **X** : Service not available

No.	Description	SEC.Code	Q'ty	SA	Remark
33	MEP-CLUTCH CAM SOLENOID	JC47-00007A	1	O	
34	BUSH-8/5	JC61-00426A	1	O	
35	SHEET-COVER FRONT OPE	JC63-00184A	1	O	
36	SHEET-HVPS	JC63-00234A	1	O	
37	PMO-COVER SMPS	JC72-01067A	1	O	
38	GEAR-OPC DRIVE 2_Z40	JC66-00478A	1	O	
39	CAM-T2 ENGAGE	JC66-00512A	1	O	
40	SHAFT-COVER EXIT HINGE	JC66-00616A	2	O	
41	IPR-BRKT GUIDE ECU C	JC70-00382A	1	O	
42	IPR-BRKT ECU LOWER	JC70-00409A	1	O	
43	MEA UNIT-BRKT ECU UPPER	JC97-01760A	1	O	
43-1	IPR-BRKT ECU UPPER	JC70-00410A	1	O	
43-2	IPR-BRKT ECU OPTION	JC70-00411A	1	O	
43-S9	SCREW-TAPTITE	6003-000266	2	X	
44	ELA UNIT-SCF	JC96-02856A	1	O	OPTION
45	PMO-COVER SENSOR BASE	JC72-01147A	1	O	
46	PMO-HARNESS C	JC72-01165A	1	O	
47	PMO-HARNESS D	JC72-01166A	1	O	
48	CABLE CLAMP	6502-001093	2	X	
49	MEA UNIT-LSU CLEANER	JC97-01838A	1	O	
49-1	SHUTTER-LSU CLEANER	JC64-00093A	1	O	
49-2	SHAFT-LSU CLEANER	JC66-00673A	1	X	
49-3	RING-E	6044-000121	2	X	
49-4	PLATE-LINK REAR	JC61-00843A	1	O	
49-5	PLATE-LINK FRONT	JC61-00844A	1	O	
51	PMO-DEVE OPEN LINK GUIDE	JC72-01176A	1	O	
52	PMO-COVER LSU/DEVE	JC63-00308A	1	O	
54	ELA UNIT-T2 ROLLER	JC96-02793A	1	O	
55	IPR-BRKT SMPS COVER	JC70-00416A	1	O	
56	MEA UNIT-DUCT FUSER	JC97-01811A	1	O	
56-1	PMO-DUCT FUSER LOWER	JC72-01150A	1	X	
56-2	PMO-DUCT FUSER UPPER	JC72-01151A	1	X	
56-S8	SCREW-TAPTITE	6003-000196	1	X	
57	MEA UNIT-WASTE TONER TANK	JC97-01821A	1	O	
57-1	COVER-M-WASTE TONER UPPER	JC63-00271A	1	O	
57-2	COVER-M-WASTE TONER LOWER	JC63-00272A	1	O	
57-3	CAP-TONER OPC	JC67-00044A	2	O	
S2	SCREW-TAPPING	6002-000115	2	X	
S5	SCREW-TAPTITE	6003-000119	6	X	
S8	SCREW-TAPTITE	6003-000196	50	X	
S9	SCREW-TAPTITE	6003-000266	21	X	
S14	SCREW-TAPTITE	6003-001256	11	X	
S15	SCREW-MACHINE	6001-000568	2	X	

ITspares.eu

9.2 Cover Front Exploded View

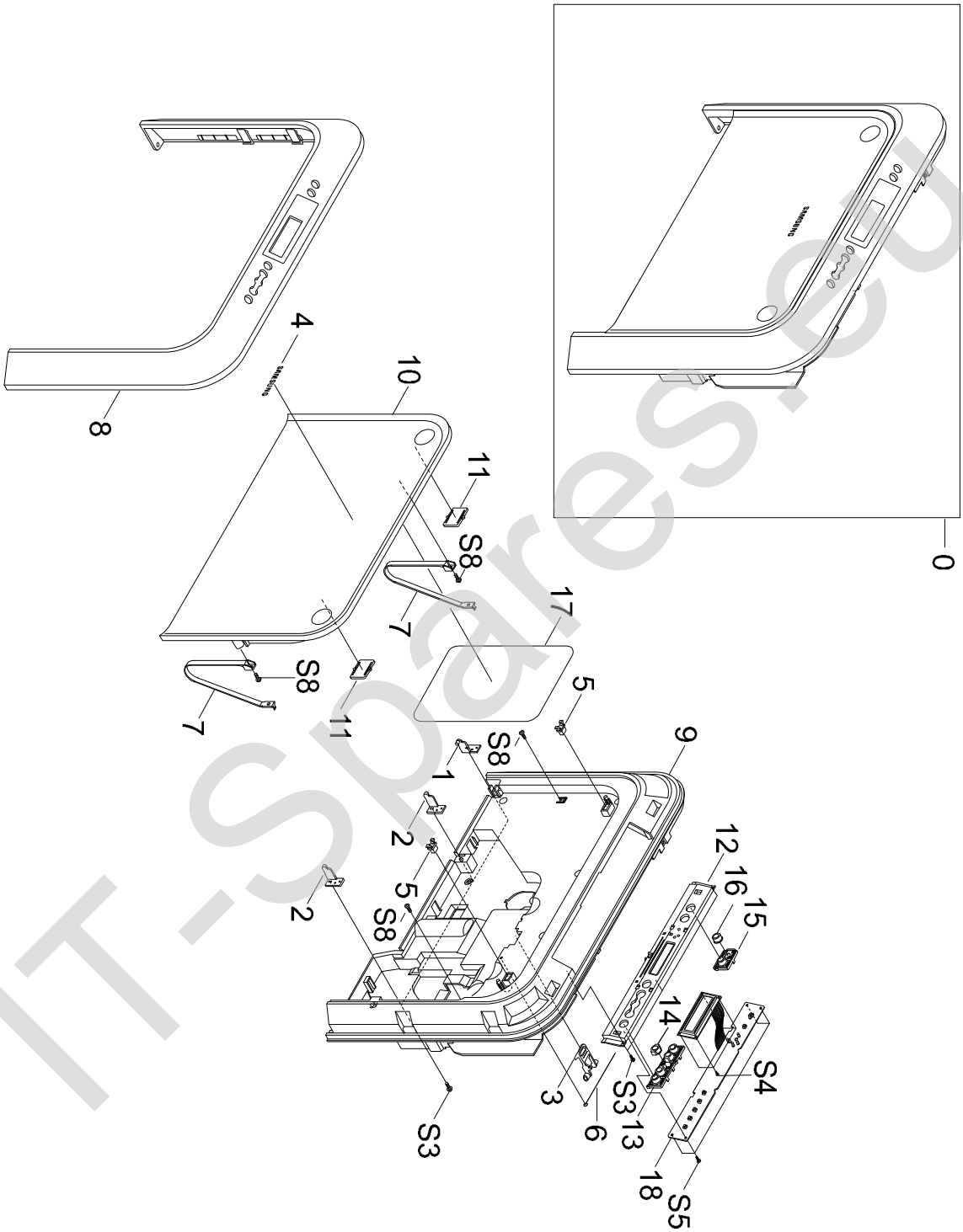

IT-Spares.eu

Cover Front Assembly Parts List

SA : Service Available
O : Service available **X** : Service not available

No.	Description	SEC.Code	Q'ty	SA	Remark
0	ELA HOU-COVER FRONT	*	1	X	
1	COVER-FRONT HINGE F	JC63-00179A	1	X	
2	COVER-FRONT HINGE R	JC63-00180A	2	X	
3	LOCKER-M-WASTER TANK	JC64-00080A	1	X	
4	BADGE-BRAND	JC64-00081A	1	X	
5	LOCKER-LATCH PUSH	JB64-00007A	2	X	
6	LOCKER-TANK PIN	JC64-00087A	1	X	
7	PMO-TIE STOPPER	JC72-00766A	2	X	
8	PMO-COVER FRONT DECO	*	1	X	
9	PMO-COVER FRONT INNER	JC72-01193A	1	X	
10	PMO-COVER FRONT OPEN	JC72-01194A	1	X	
11	PMO-COVER FRONT PUSH	JC72-01195A	2	X	
12	PMO-COVER OPE FRAME	JC72-01196A	1	X	
13	PMO-OPE KEY 1	JC72-01197A	1	X	
14	PMO-OPE KEY 1 CAP	JC72-01198A	1	X	
15	PMO-OPE KEY 2	JC72-01199A	1	X	
16	PMO-OPE KEY 2 CAP	JC72-01200A	1	X	
17	LABEL(P)-FRONT INNER	JC68-01175A	1	X	
18	PBA SUB-PANEL	JC92-01443A	1	O	
S4	SCREW-TAPTITE	6002-000308	2	X	
S5	SCREW-TAPTITE	6003-000119	6	X	
S8	SCREW-TAPTITE	6002-000308	4	X	
S3	SCREW-TAPPING	6002-000175	4	X	

IT-Spares.eu

9.3 Cover Top Exploded View

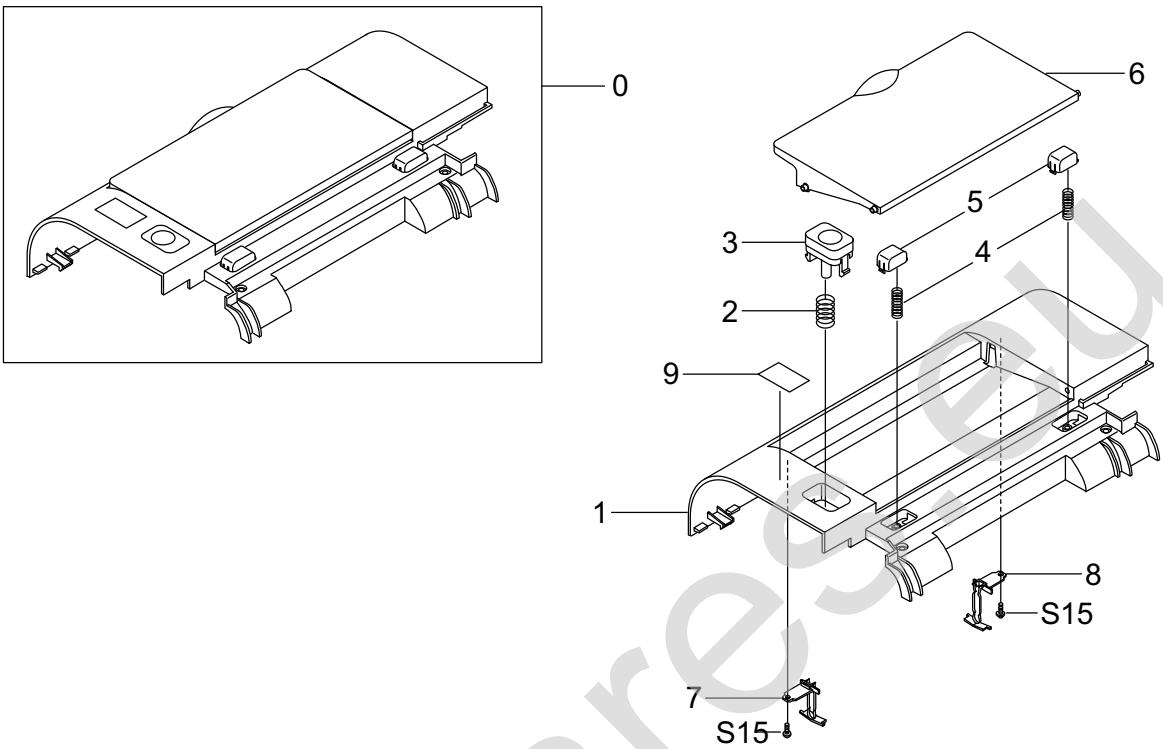

Cover Top Assembly Parts List

SA : Service Available
O : Service available **X** : Service not available

No.	Description	SEC.Code	Q'ty	SA	Remark
0	MEA HOU-COVER TOP	JC97-01765A	1	O	
1	PMO-COVER TOP	JC72-01204A	1	X	
2	SPRING-CS	6107-000117	1	X	
3	PMO-COVER TOP BUTTON	JC72-01205A	1	X	
4	SPRING-CS	6107-001198	2	X	
5	PMO-COVER TOP OPENER	JC72-01206A	2	X	
6	PMO-COVER TOP STACKER	JC72-01207A	1	O	
7	STOPPER-STACKER F	JC61-00714A	1	X	
8	STOPPER-STACKER R	JC61-00715A	1	X	
9	LABEL(P)-TOP	JC68-01181A	1	X	
S15	SCREW-TAPTITE	6003-000261	2	X	

ITSpares.eu

9.4 Cover Deve Exploded View

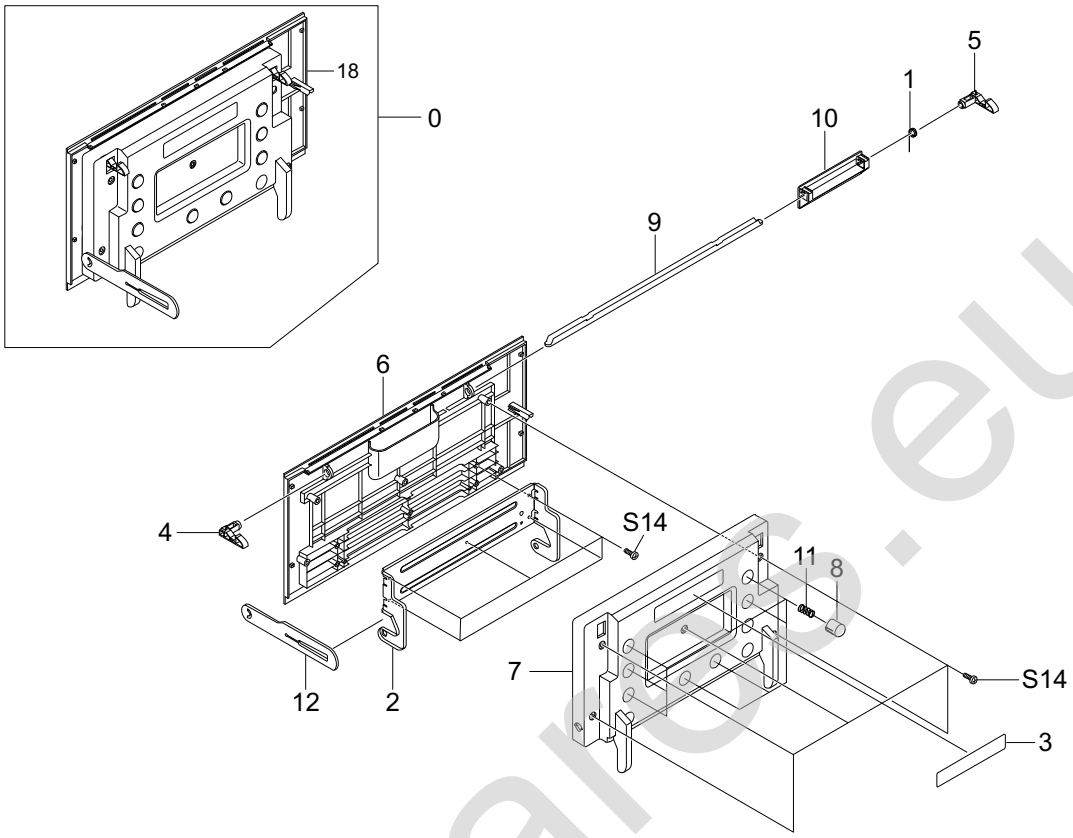

Cover Deve Assembly Parts List

SA : Service Available
O : Service available X : Service not available

No.	Description	SEC.Code	Q'ty	SA	Remark
0	MEA HOU-COVER DEVE	JC97-01766A	1	O	
1	SPRING-TS	6107-001206	1	X	
2	IPR-COVER DEV LOCK BAR	JC70-00436A	1	X	
3	LABEL(P)-DEVE COVER	JC68-01180A	1	X	
4	PMO-COVER DUP LOCKER F	JC72-01081A	1	X	
5	PMO-COVER DUP LOCKER R	JC72-01082A	1	X	
6	PMO-COVER DEVE	JC72-01213A	1	X	
7	PMO-COVER DEVE INNER	JC72-01214A	1	X	
8	PMO-COVER DEV SPRING CAP	JC72-01215A	8	X	
9	ARM-COVER DEVE HINGE	JC66-00563A	1	X	
10	PMO-COVER DUPLEX HANDLE	JC72-01079A	1	X	
11	SPRING-CS	6107-01198A	8	X	
12	PMO-DEVE OPEN LINK	JC72-01175A	1	X	
S14	SCREW-TAPTITE	6003-001256	10	X	

ITSpares.eu

9.5 Exit Ass'y Exploded View

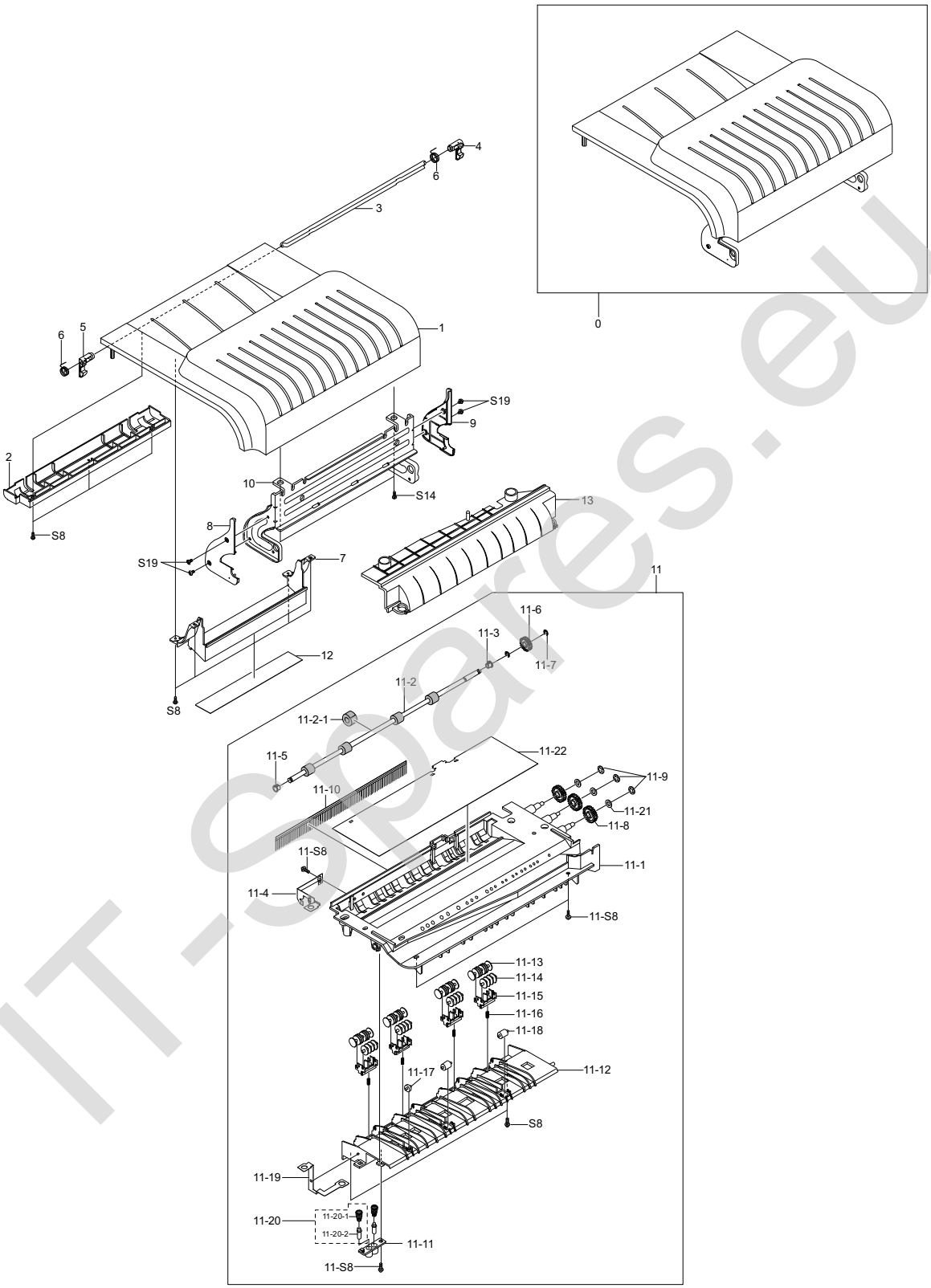

IT-Spares.eu

Exit Ass'y Assembly Parts List

SA : Service Available
O : Service available **X** : Service not available

No.	Description	SEC.Code	Q'ty	SA	Remark
0	MEA-EXIT	JC97-01754A	1	O	
1	PMO-COVER EXIT	JC72-01099A	1	O	
2	PMO-C/EXIT LOCK COVER	JC72-01217A	1	O	
3	IPR-COVER EXIT BAR	JC70-00440A	1	O	
4	PMO-COVER DUP LOCKER F	JC72-01081A	1	X	
5	PMO-COVER DUP LOCKER R	JC72-01082A	1	X	
6	SPRING-TS	6107-001209	2	X	LOCKER
7	PMO-COVER EXIT GUIDE	JC72-01098A	1	O	
8	PMO-COVER EXIT F CAP	JC72-01097A	1	O	
9	COVER-EXIT R CAP	JC63-00174A	1	O	
10	IPR-COVER EXIT HINGE	JC70-00372A	1	O	
11	MEA UNIT-EXIT FRAME	JC97-01763A	1	O	
11-1	PMO-GUIDE EXIT UPPER	JC72-01103A	1	O	
11-2	ROLLER-EXIT DRIVE	JC66-00607A	1	O	
11-2-1	ROLLER-EXIT-IDLE	JC66-00694A	1	X	
11-3	PMO-BEARING LARGE DP	JC72-00885A	1	O	
11-4	IPR-GROUND EXIT	JC70-00374A	1	O	
11-5	PMO-BEARING LARGE DP	JC72-40978A	1	O	
11-6	GEAR-DUPLEX	JC66-40912A	1	O	
11-7	RING-C	6044-000159	1	X	
11-8	GEAR-DP,IDLE	JC66-40911A	3	X	
11-9	RING-CS	6044-000001	3	X	
11-10	BRUSH ANTISTATIC	JC67-00065A	1	O	
11-11	PMO-HOLDER GROUND BALL	JC72-01233A	1	O	
11-12	PMO-GUIDE EXIT LOWER	JC72-01102A	1	O	
11-13	PMO-ROLLER FD F	JC72-41007A	4	O	
11-14	PMO-ROLLER FD R	JC72-41008A	4	O	
11-15	HOLDER-EXIT(MC)	JC61-00547A	4	O	
11-16	SPRING ETC-EXIT LOWER IDLE	JC61-00484A	4	O	
11-17	ROLLER-EXIT IDLE	JC66-00608A	1	O	
11-18	PEX-ROLLER EXIT F_UP	JC72-20901A	2	O	
11-19	IPR-GROUND EXIT PLATE	JC70-00375A	1	O	
11-20	MEA UNIT-TERMINAL:L	JC97-01410A	2	O	
11-20-1	SPRING ETC-HV SMALL	JC61-70930A	1	O	
11-20-2	ICT-SHAFT HV LARGE	JC70-40912A	1	O	
11-21	SPRING-ETC-CLUTCH	JB61-70922A	3	O	
11-22	SHEET-EXIT UPPER	JC63-00265A	1	O	
11-S8	SCREW-TAPTITE	6003-000196	4	X	
12	LABEL(P)-EXIT	JC68-01150A	1	X	
13	GUIDE-EXIT REAR	JC61-00850A	1	O	
S8	SCREW-TAPTITE	6003-000196	12	X	
S14	SCREW-TAPTITE	6003-001256	2	X	
S19	SCREW-TAPTITE	6003-000008	4	X	

ITspares.eu

9.6 Duplex Ass'y Exploded View

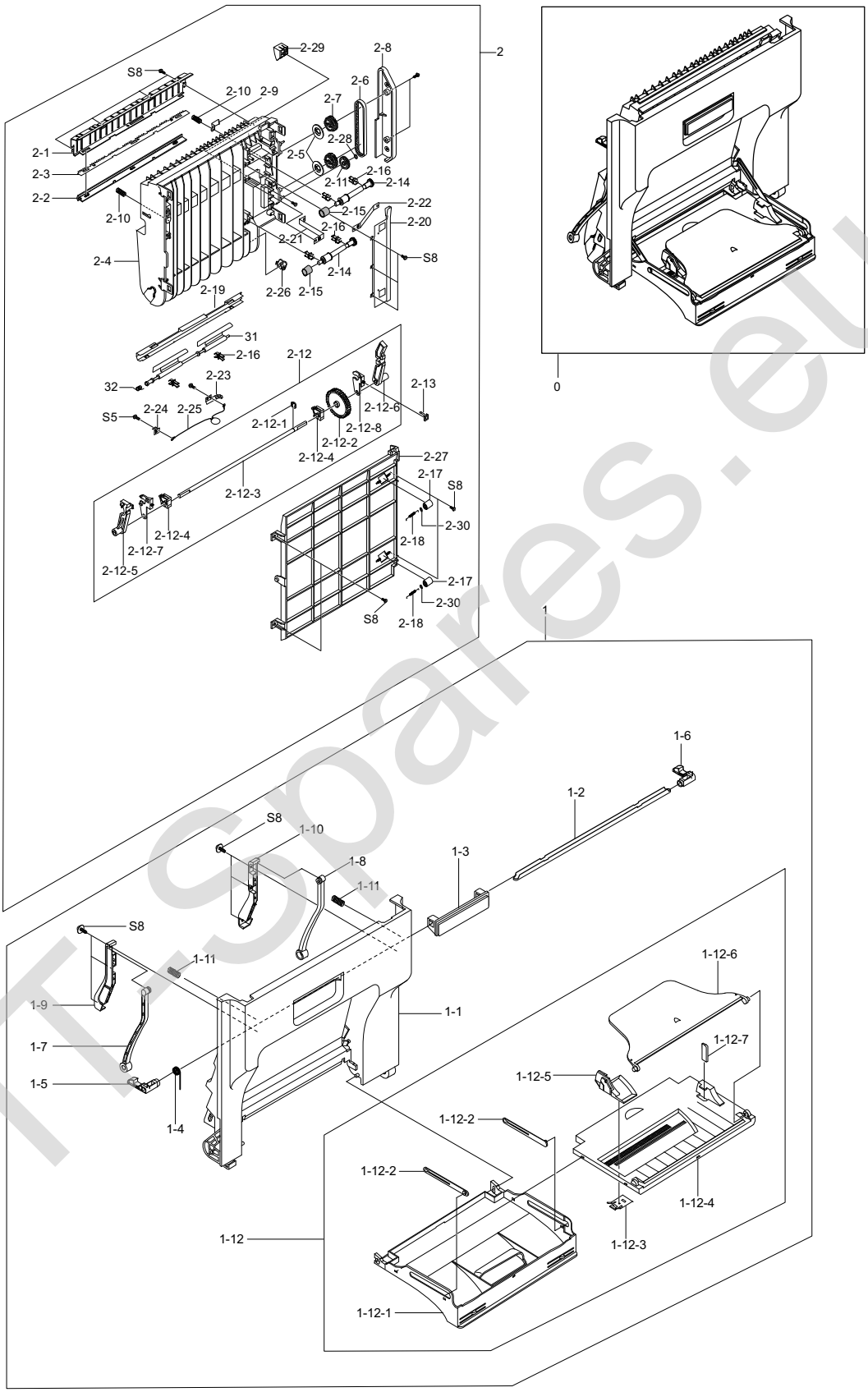

ITSpares.eu

Duplex Ass'y Assembly Parts List

SA : Service Available
O : Service available **X** : Service not available

No.	Description	SEC.Code	Q'ty	SA	Remark
0	MEA-DUPLEX	JC97-01756A	1	O	
1	MEA HOU-COVER RIGHT	JC97-01758A	1	O	
1-1	PMO-COVER DUPLEX	JC72-01078A	1	O	
1-2	IPR-COVER DUP LOCK SHAFT	JC70-00370A	1	O	
1-3	PMO-COVER DUPLEX HANDLE	JC72-01079A	1	X	
1-4	SPRING-TS	6107-001206	1	O	
1-5	PMO-COVER DUP LOCKER F	JC72-01081A	1	X	
1-6	PMO-COVER DUP LOCKER R	JC72-01082A	1	X	
1-7	PMO-COVER DUPLEX LINK	JC72-01080A	1	O	
1-8	COVER-DUPLEX LINK R	JC63-00172A	1	O	
1-9	PMO-COVER DUPLEX RAIL	JC72-01083A	1	O	
1-10	COVER-DUPLEX RAIL R	JC63-00173A	1	O	
1-11	SPRING CS(FEED)	6107-001944	2	O	
1-12	MEA UNIT-TRAY MP	JC97-01759A	1	O	
1-12-1	PMO-TRAY CASE MP	JC72-01096A	1	X	
1-12-2	PMO-TRAY LINK MP	JC72-00857B	2	X	
1-12-3	IPR-GUIDE LATCH	JB70-10906A	1	X	
1-12-4	PMO-TRAY COVER MP	JC72-00777B	1	O	
1-12-5	PMO-SIDE GUIDE MP	JC72-00547H	1	X	
1-12-6	PMO-TRAY EXIT MP	JC72-00778B	1	X	
1-12-7	LABEL(R)-HEIGHT,MP	JC68-00697A	1	X	
2	MEA UNIT-DUPLEX	JC97-01828A	1	O	
2-1	IPR-BRKT GUIDE A	JC70-00361A	1	O	
2-2	HOLDER-M-SAW	JC61-00841A	1	O	
2-3	IPR-PLATE SAW	JC70-10232A	1	O	
2-4	PMO-FRAME DUPLEX	JC72-01084A	1	O	
2-5	PMO-PULLEY BELT	JC72-01094A	2	O	
2-6	BELT-TIMMING	JC66-20901A	1	O	
2-7	GEAR-DUPLEX IDLER_Z25	JC66-00513A	2	O	
2-8	PMO-COVER BELT	JC72-01077A	1	O	
2-9	IPR-BRKT GROUND TR	JC70-00367A	1	O	
2-10	SPRING-CS(ETC-TR)	6107-001202	2	X	
2-11	GEAR-MP/DUP DRV	JC66-00346A	1	O	
2-12	MEA UNIT-T2	JC97-01761A	1	O	
2-12-1	RING-E	6044-000231	1	X	
2-12-2	GEAR-TRANSFER IDLER_Z47	JC66-00515A	1	X	
2-12-3	SHAFT-GUIDE TR	JC66-00619A	1	X	
2-12-4	PMO-HOLDER TRANSFER	JC72-01087A	2	X	
2-12-5	PMO-LEVER TR FRONT	JC72-01090A	1	X	
2-12-6	PMO-LEVER TR REAR	JC72-01091A	1	X	
2-12-7	PMO-LINK TR FRONT	JC72-01092A	1	X	
2-12-8	PMO-LINK TR REAR	JC72-01093A	1	O	

ITSpares.eu

Duplex Ass'y Assembly Parts List

SA : Service Available
O : Service available **X** : Service not available

No.	Description	SEC.Code	Q'ty	SA	Remark
2-13	IPR-BRKT GROUND TR1	JC70-00368A	1	O	
2-14	PMO-SHAFT DUP DRIVER	JC72-00764A	2	O	
2-15	RPR-RUBBER EXIT	JC73-10203A	2	O	
2-16	PMO-BUSHING TX(B4)	JG72-40744A	6	O	
2-17	PMO-ROLLER_EXIT	JC72-40361A	2	O	
2-18	SPRING ETC-FUSER EXIT	JC61-70976A	2	O	
2-19	IPR-BRKT GUIDE B	JC70-00362A	1	O	
2-20	IPR-BRKT GUIDE DUPLEX	JC70-00369A	1	O	
2-21	IPR-BRKT GROUND B	JC70-00364A	1	O	
2-22	IPR-BRKT GROUND A	JC70-00363A	1	O	
2-23	IPR-BRKT GROUND D	JC70-00366A	1	O	
2-24	IPR-BRKT GROUND C	JC70-00365A	1	O	
2-25	CBF HARNESS-OPE GROUND	JC39-00036A	1	O	
2-26	PMO-BUSHING FEED	JC72-00730A	1	O	
2-27	PMO-GUIDE LOWER DUPLEX	JC72-01086A	1	O	
2-28	RING-CS	6044-000001	1	O	
2-29	PMO-GUIDE FEED	JC72-01085A	1	O	
2-30	WASHER-PLAIN	6031-001051	1	X	
2-31	GUIDE-M-PAPER T2	JC61-00866A	2	X	
2-32	SPRING ETC-ACTUATOR6G	JC61-00485A	1	X	
S5	SCREW-TAPTITE	6003-000119	19	X	
S8	SCREW-TAPTITE	6003-000196	19	X	

IT-Spares.eu

9.7 Deve-Drive Ass'y Exploded View

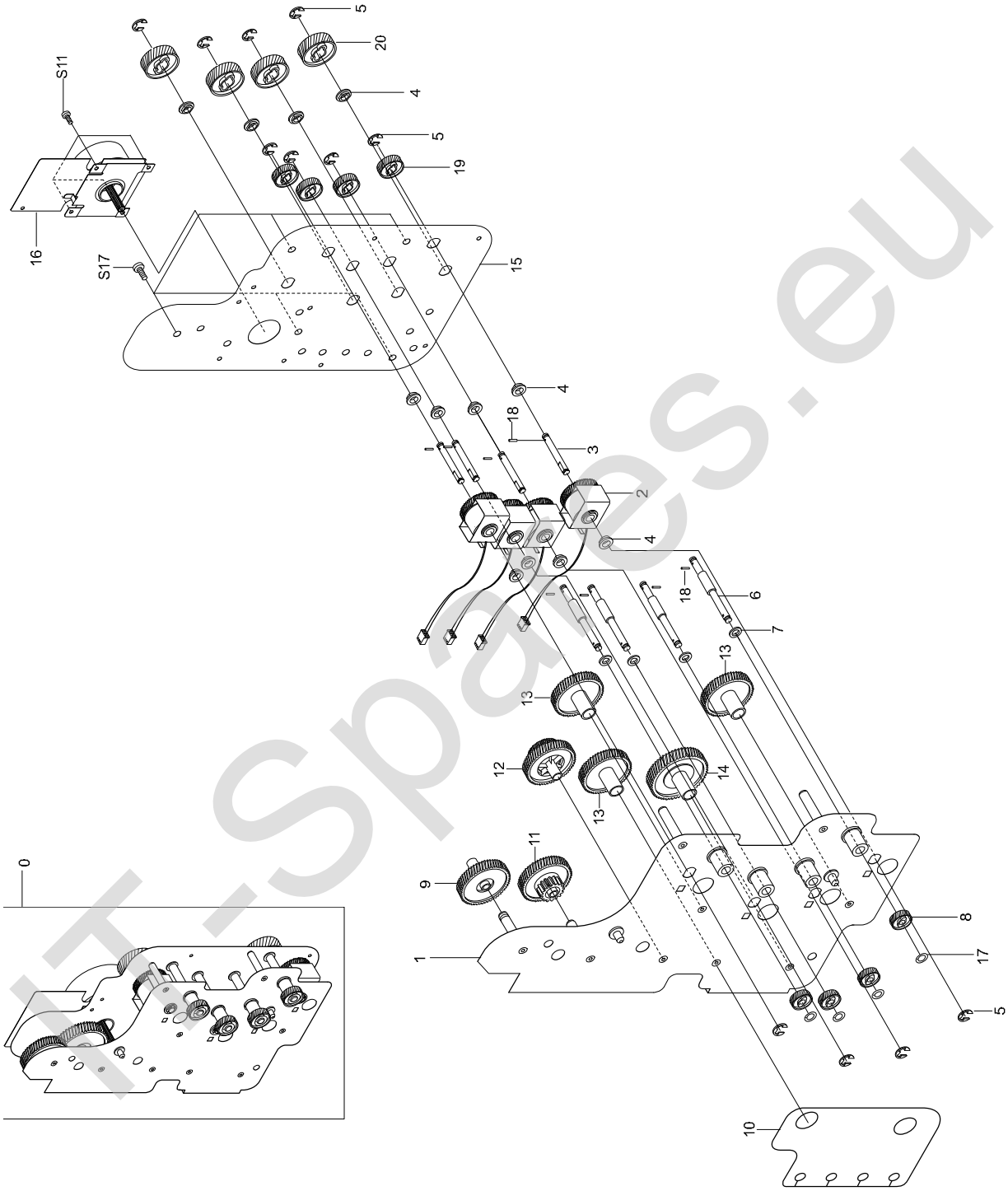

iT-Spares.eu

Deve-Drive Ass'y Assembly Parts List

SA : Service Available
O : Service available **X** : Service not available

No.	Description	SEC.Code	Q'ty	SA	Remark
0	ELA UNIT-DEVE DRIVE	JC96-02772A	1	O	
1	IPR-BRKT-DEVE FRONT	JC70-00342A	1	O	
2	MEP-CLUTCH SPRING DEVE	JC47-00006A	4	O	
3	SHAFT-DEVE CLUTCH	JC66-00544A	4	O	
4	BUSH-D6/L4	JC61-00699A	12	X	
5	RING-E	6044-000125	12	O	
6	SHAFT-DEVE DRIVE	JC66-00545A	4	X	
7	WASHER-PLAIN	6031-000023	4	O	
8	GEAR-DEVE DRIVE 2_Z20	JC66-00465A	4	O	
9	GEAR-DEVE IDLE Z51	JC66-00473B	1	O	
10	SHEET-HARNESS GUIDE	JC63-00264A	1	O	
11	GEAR-ITB CLEAN RDCN	JC66-00469A	1	O	
12	GEAR-DEVE RDCN	JC66-00468A	1	O	
13	GEAR-DEVE IDLE_Z41	JC66-00466A	3	O	
14	GEAR-DEVE IDLE_Z53	JC66-00467A	1	O	
15	IPR-BRKT-DEVE REAR	JC70-00343A	1	O	
16	MOTOR DC-MAIN(BLDC)	JC31-00021 A	1	O	
17	WASHER-PLAIN	6031-001255	4	O	
18	ICT-PIN ADF	JB70-00168A	12	O	
19	GEAR-DEVE DRIVE 1_Z25	JC66-00464A	4	O	
20	GEAR-DEVE CLUTCH 2_Z33	JC66-00463A	4	O	
S11	SCREW-TAPTITE	6003-000269	4	X	
S17	SCREW-TAPTITE	6003-000301	5	X	

IT-Spares.eu

9.8 Main-Drive Ass'y Exploded View

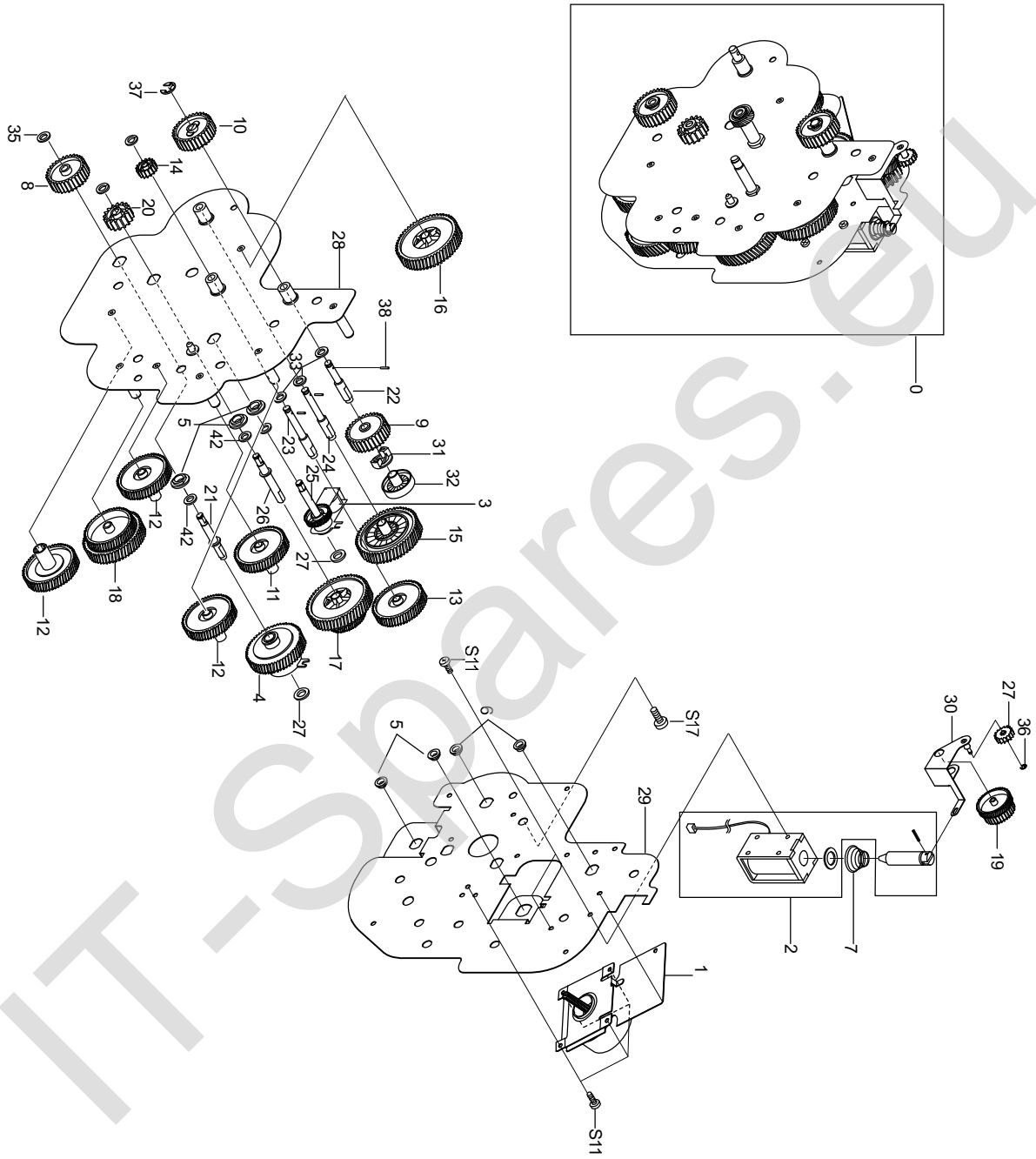

IT-Spares.eu

Main-Drive Ass'y Assembly Parts List

SA : Service Available
O : Service available **X** : Service not available

No.	Description	SEC.Code	Q'ty	SA	Remark
0	ELA UNIT-MAIN DRIVE	JC96-02771A	1	O	
1	MOTOR DC-MAIN(BLDC)	JC31-00021A	1	O	
2	SOLENOID-DUPLEX	JC33-00008B	1	O	
3	MEP-CLUTCH CAM SOLENOID	JC47-00007A	1	O	
4	MEP-CLUTCH ELECTRIC FEED	JC47-00008A	1	O	
5	BUSH-8/5	JC61-00426A	3	O	
6	BUSH-D6/L4	JC61-00699A	6	O	
7	SPRING ETC-SOLENOID DP	JC61-70915A	1	O	
8	GEAR-FEED DRIVE_Z37	JC66-00470A	1	O	
9	GEAR-FUSER DRIVE 1_Z47	JC66-00471A	1	O	
10	GEAR-FUSER DRIVE 2_Z30	JC66-00472A	1	O	
11	GEAR-IDLE Z51	JC66-00473A	1	O	
12	GEAR-IDLE Z53	JC66-00474A	3	O	
13	GEAR-ITB DRIVE 1_Z90	JC66-00475A	1	O	
14	GEAR-ITB DRIVE 2_Z30	JC66-00476A	1	O	
15	GEAR-OPC DRIVE 1_Z120	JC66-00477A	1	O	
16	GEAR-OPC RDCN_Z120/Z60	JC66-00479A	1	O	
17	GEAR-RDCN Z110/Z37	JC66-00480A	1	O	
18	GEAR-RDCN Z62/Z48	JC66-00481A	1	O	
19	GEAR-SWING DRIVE	JC66-00482A	1	O	
20	GEAR-T2 DRIVE_Z25	JC66-00483A	1	O	
21	SHAFT-FEED DRIVE	JC66-00546A	1	O	
22	SHAFT-FUSER DRIVE	JC66-00547A	1	O	
23	SHAFT-ITB DRIVE	JC66-00549A	1	O	
24	SHAFT-OPC DRIVE	JC66-00550A	1	O	
25	SHAFT-T2 CAM	JC66-00551A	1	O	
26	SHAFT-T2 DRIVE	JC66-00552A	1	O	
27	"GEAR-EXIT/U,ID"	JC66-40211B	1	O	
28	IPR-BRKT MAIN FRONT	JC70-00341A	1	O	
29	IPR-BRKT MAIN REAR	JC70-00344A	1	O	
30	IPR-LINK SOLENOID	JC70-00346A	1	O	
31	PMO-HUB CLUTCH	JC72-01064A	1	O	
32	PMO-DUMMY CLUTCH	JC72-01232A	1	O	
33	WASHER-PLAIN	6031-000023	3	O	
34	WASHER-PLAIN	6031-001002	4	O	"ITB,Feed,T2"
35	WASHER-PLAIN	6031-001255	3	O	
36	RING-C	6044-000159	1	X	
37	RING-E	6044-000231	1	X	Fuser
38	ICT-PIN ADF	JB70-00168A	2	X	
42	WASHER-PLAIN	6031-001491	4	O	
S11	SCREW-TAPTITE	6003-000269	4	X	Motor + Brkt - Rear
S11	SCREW-TAPTITE	6003-000269	2	X	Solenoid - Duplex + Brkt - Rear
S17	SCREW-TAPTITE	6003-000301	4	X	

ITSpares.eu

9.9 Fuser Ass'y Exploded View

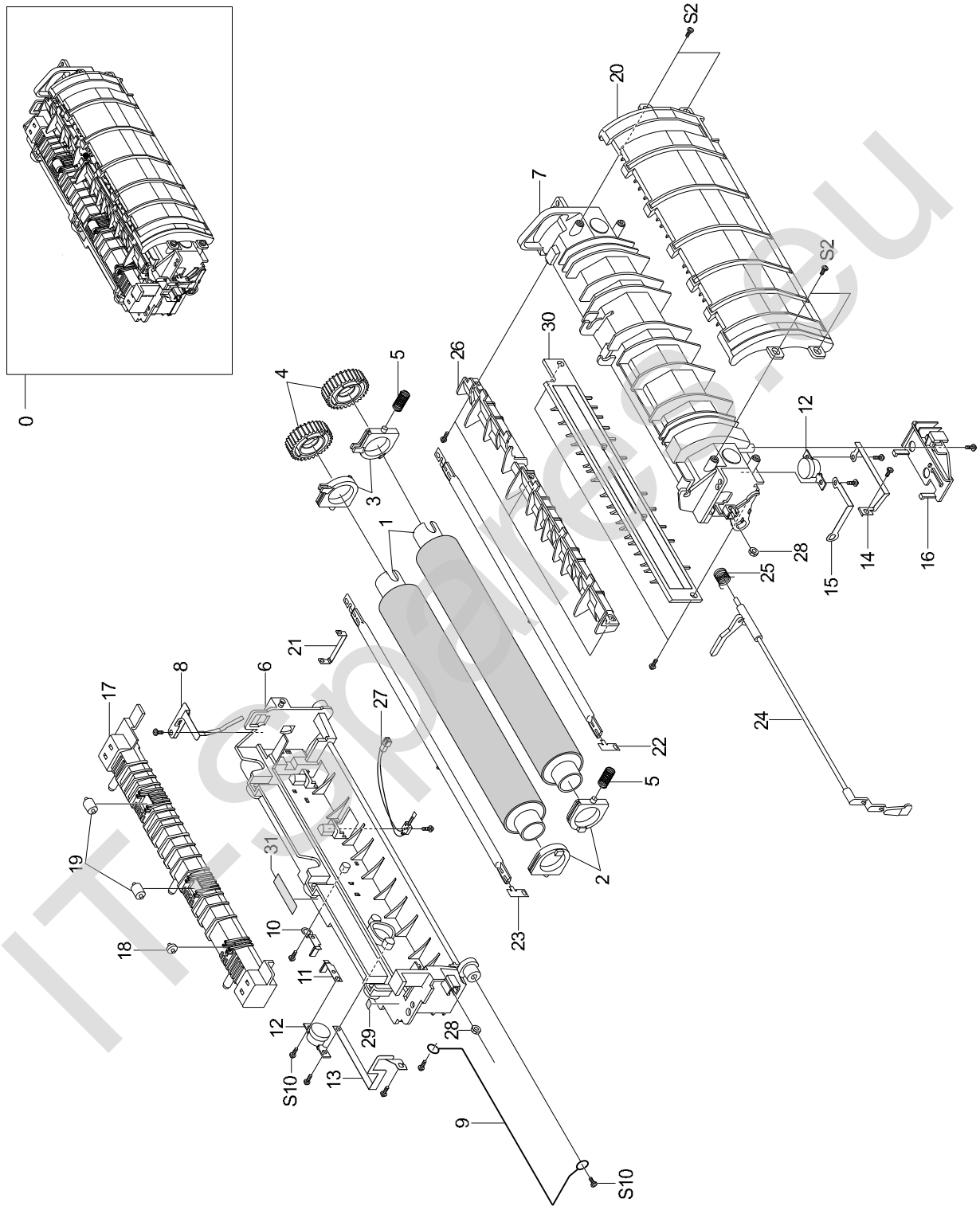

ITspares.eu

Fuser Ass'y Assembly Parts List

SA : Service Available
O : Service available **X** : Service not available

No.	Description	SEC.Code	Q'ty	SA	Remark
0	ELA UNIT-FUSER	JC96-02773A	1	O	220V
	ELA UNIT-FUSER	JC96-02773B	1	O	110V
1	ROLLER-HEAT	JC66-00516A	2	X	
2	PMO-BEARING FUSER F	JC72-01058A	2	X	
3	PMO-BEARING FUSER GEAR	JC72-01059A	2	X	
4	GEAR-FUSER_Z35	JC66-00510A	2	X	
5	SPRING-CS	6107-001193	2	X	
6	PMO-FUSER UPPER	JC72-01061A	1	X	
7	PMO-FUSER LOWER	JC72-01062A	1	X	
8	IPR-GROUND FUSER	JC70-00355A	1	X	
9	NPR-ELECTRODE AC WIRE	JC71-00043A	1	O	
10	NPR-ELECTRODE GEAR	JC71-00047A	1	O	
11	NPR-ELECTRODE M	JC71-00048A	1	O	
12	THERMOSTAT	4712-000001	2	O	
13	NPR-ELECTRODE F	JC71-00046A	1	O	
14	NPR-ELECTRODE PR	JC71-00049A	1	O	
15	NPR-ELECTRODE AC PLATE	JC71-00044A	1	O	
16	PMO-COVER THERMOSTAT	JC72-01055A	1	O	
17	PMO-COVER CLEANING	JC72-01060A	1	O	
18	ROLLER-EXIT IDLE	JC66-00608A	1	O	
19	PEX-ROLLER EXIT F_UP	JC72-20901A	2	O	
20	PMO-GUIDE DP SIDE	JC72-01100A	1	O	
21	NPR-ELECTRODE CONNECTOR	JC71-00045A	1	O	
22	LAMP-HALOGEN, 300W	4713-001178	1	O	220V
	LAMP-HALOGEN, 300W	4713-001177	1	O	110V
23	LAMP-HALOGEN, 500W	4713-001176	1	O	220V
	LAMP-HALOGEN, 500W	4713-001175	1	O	110V
24	PMO-ACTUATOR EXIT	JC72-01056A	1	O	
25	SPRING-TS	6107-001205	1	O	
26	PMO-GUIDE OUTPUT	JC72-01063A	1	O	
27	THERMISTOR-NTC	1404-001310	1	O	
28	NUT-HEXAGON	6021-000222	4	O	
29	LABEL(R)-HV FUSER	JC68-00407A	1	O	220V
	LABEL(R)-LV FUSER	JC68-00408A	1	O	110V
30	PMO-GUIDE INPUT	JC72-01208A	1	O	
31	LABEL(P)-CAUTION,HOT_FU	JC68-30928E	1	O	
32	FRAME DRAWER CONNECTOR	JC61-00869A	1	O	
S10	SCREW-ASS'Y MACH	6006-001193	10	O	
S8	SCREW-TAPTITE	6003-000196	13	O	

ITSpares.eu

9.10. Cassette Ass'y Exploded View

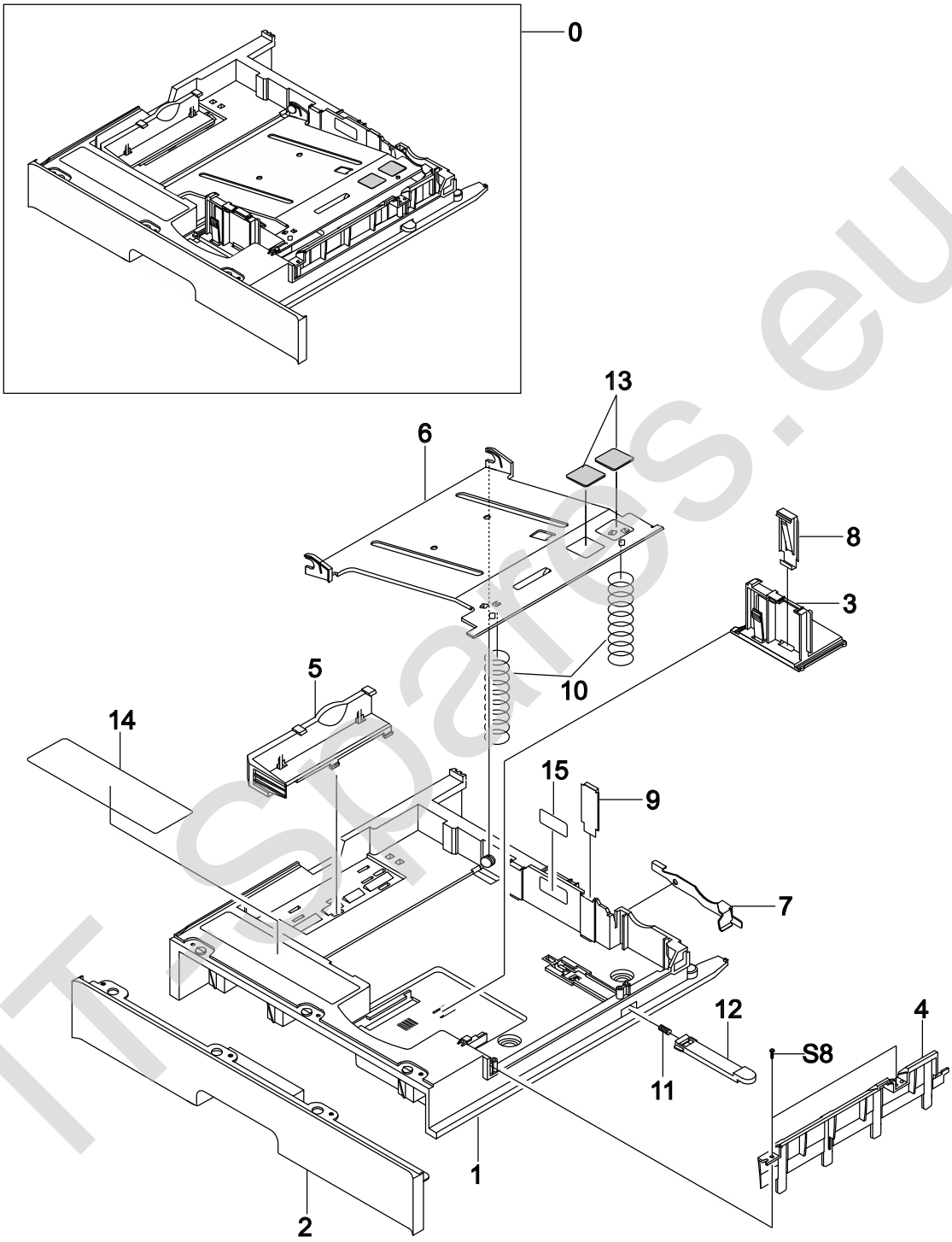

ITSpares.eu

Cassette Ass'y Assembly Parts List

SA : Service Available
O : Service available **X** : Service not available

No.	Description	SEC.Code	Q'ty	SA	Remark
0	MEA-CASSETTE	JC97-01753A	1	O	
1	PMO-FRAME CASSETTE	JC72-01069A	1	O	
2	PMO-COVER CASSETTE	JC72-01068A	1	O	
3	PMO-GUIDE SIDE CST	JC72-01072A	1	O	
4	PMO-GUIDE FRONT CST	JC72-01070A	1	O	
5	PMO-GUIDE REAR	JC72-01071A	1	O	
6	IPR-PLATE K/UP	JC70-00357A	1	O	
7	IPR-FINGER	JC70-00220A	1	O	
8	IPR-SPRING PLATE G/SIDE	JC70-00358A	1	O	
9	IPR-GUIDE PLATE PAPER	JC70-00356A	1	O	
10	SPRING ETC-KNOCK UP(270)	6107-001200	2	X	
11	SPRING ETC-LOCKER	JG61-70531A	1	O	
12	PMO-LOCKER PLATE	JC72-01073A	1	O	
13	RPR-PAD CST	JC73-10910A	2	O	
14	LABEL(R)-INSTRUCTION	JC68-01174A	1	X	
15	LABEL(R)-HEIGHT XEROX	JC68-00516A	1	X	
S8	SCREW-TAPTITE	6003-000196	2	X	

IT-Spares.eu

9.11. SCF Cassette Ass'y Exploded View

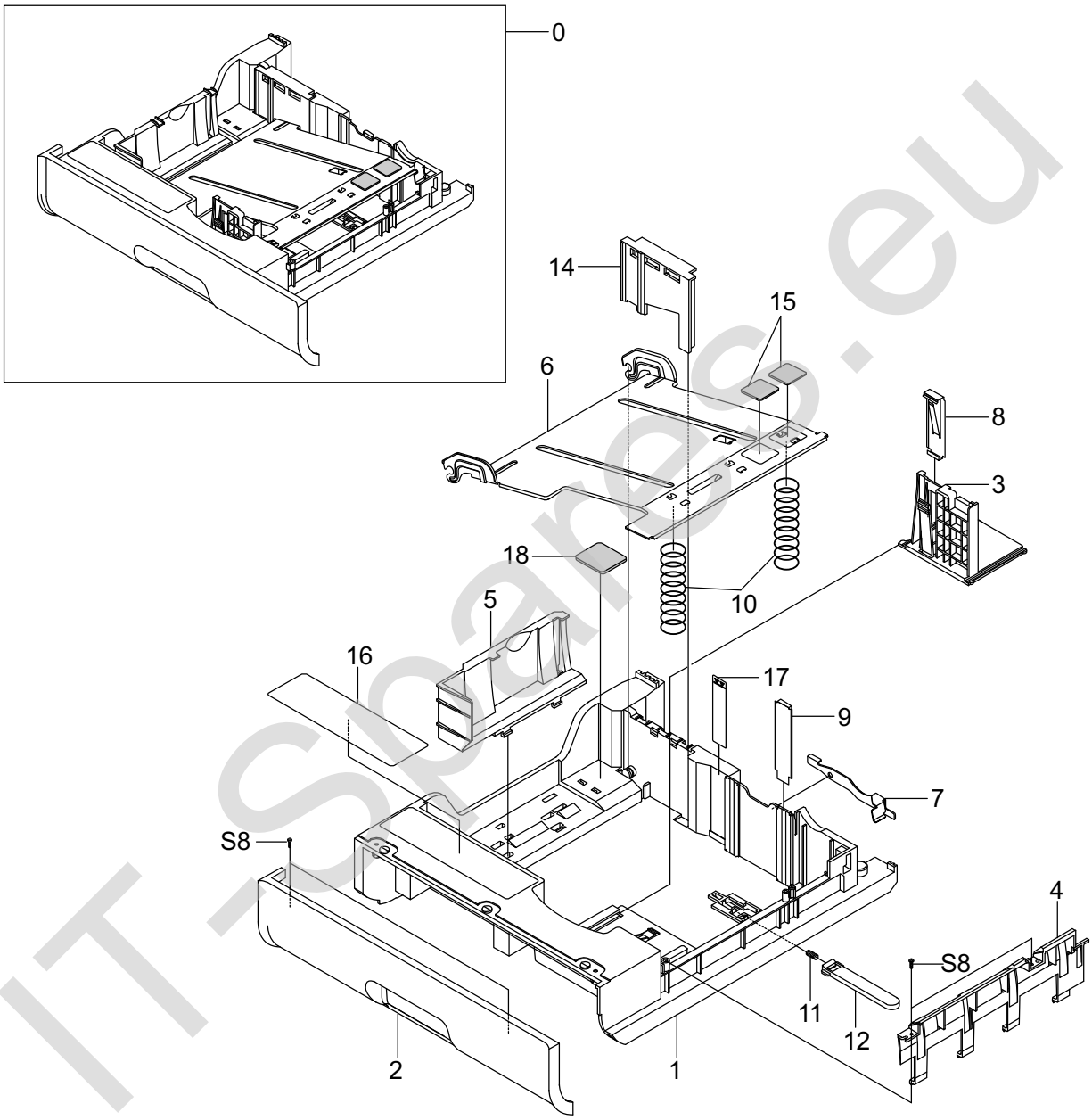

IT-Spares.eu

SCF Cassette Ass'y Assembly Parts List

SA : Service Available
O : Service available **X** : Service not available

No.	Description	SEC.Code	Q'ty	SA	Remark
0	MEA UNIT-CASSETTE SCF(LTR)	JC97-01809A	1	O	LETTER
	MEA UNIT-CASSETTE SCF(A4)	JC97-01809B	1	O	A4
1	PMO-FRAME CASSETTE(SCF)	JC72-01238A	1	X	
2	PMO-COVER CASSETTE(SCF)	JC72-01236A	1	X	
3	PMO-GUIDE SIDE(SCF)	JC72-01243A	1	X	
4	PMO-GUIDE FRONT CST	JC72-00798B	1	X	
5	PMO-GUIDE REAR(SCF)	JC72-01239A	1	X	
6	IPR-PLATE K/UP	JC70-00221A	1	X	
7	IPR-FINGER	JC70-00220A	1	X	
8	IPR-SPR PLATE G/SIDE	JC70-10929A	1	X	
9	IPR-GUIDE PLT PAPER	JC70-10923A	1	X	
10	SPRING-CS	6107-001190	2	X	LETTER
	SPRING-CS	6107-001213	2	X	A4
11	"SPRING ETC-LOCKER,PLATE"	JG61-70531A	1	X	
12	PMO-LOCKER PLATE	JC72-41210A	1	X	
14	PMO-DUMMY SIDE GUIDE(SCF)	JC72-01237A	1	X	
15	RPR-PAD CST	JC73-10910A	2	X	
16	LABEL(P)-INSTRUCTION CST	JC68-01174A	1	X	
17	LABEL(R)-HEIGHT CST	JC68-00709A	1	X	
18	LABEL(P)-LTR	JC68-01227A	1	X	LETTER
	LABEL(P)-A4	JC68-01232A	1	X	A4
19	GREASE BEARING	0205-001087	0.1	X	
S8	SCREW-TAPTITE	6003-000196	4	X	

IT-Spares.eu

9.12. Frame SCF Ass'y Exploded View

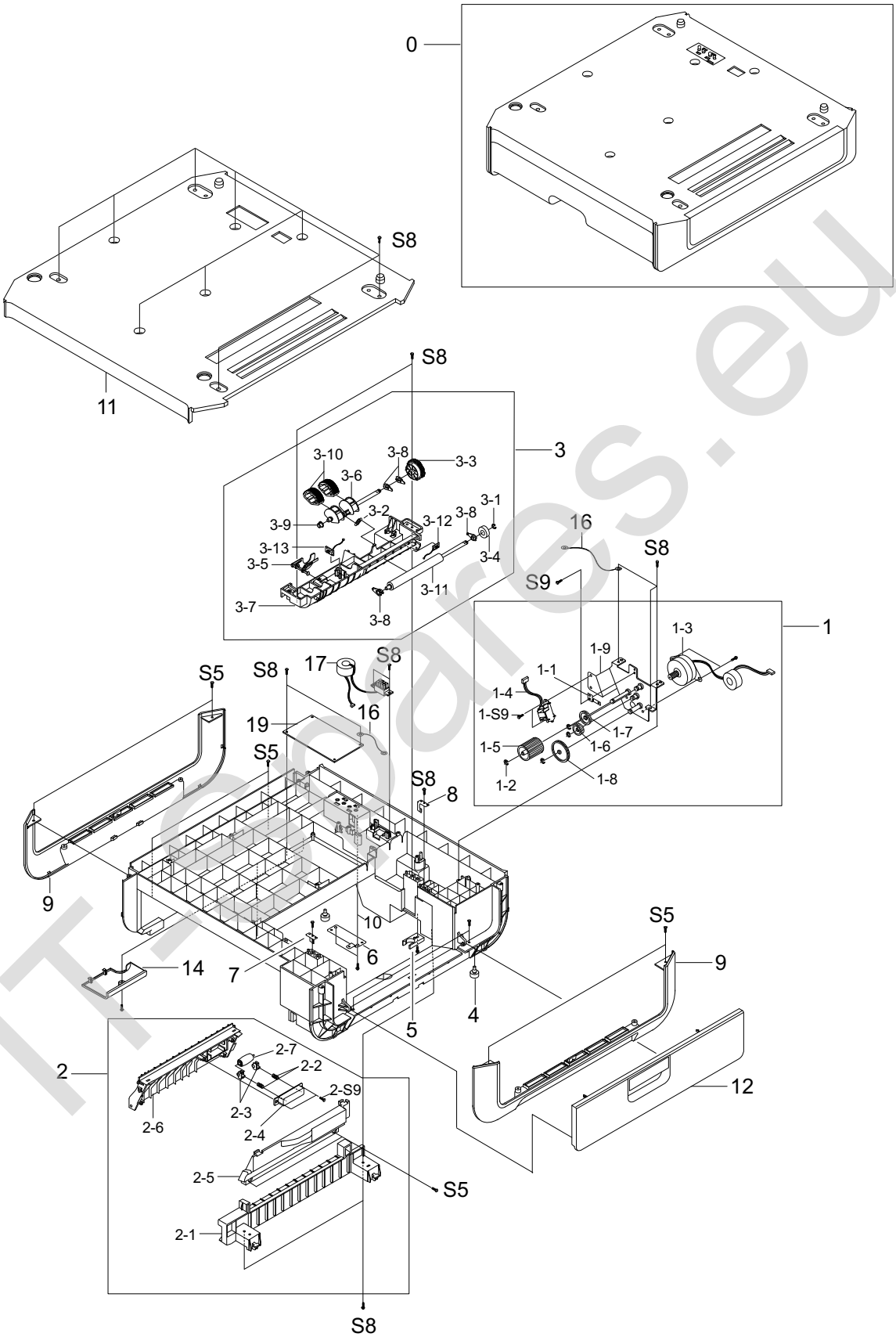

ITRepares.eu

Frame SCF Ass'y Assembly Parts List

SA : Service Available
O : Service available **X** : Service not available

No.	Description	SEC.Code	Q'ty	SA	Remark
0	MEA BASE-FRAME SCF	JC97-01808A	1	X	
1	ELA HOU-MOTOR SCF	JC96-02283A	1	X	
1-1	IPR-GROUND_ROLLER	JC70-10467A	1	X	
1-2	RING-E	6044-000125	4	X	
1-3	MOTOR STEP-SCF	JC31-10501A	1	X	
1-4	SOLENOID-PICK UP	JC33-00007A	1	X	
1-5	GEAR-P/UP DRV SCF	JC66-00330A	1	X	
1-6	GEAR-IDLER OPTION	JC66-40365A	1	X	
1-7	GEAR-IDLE(Z=30)	JC66-40950A	1	X	
1-8	GEAR-IDLE(SCF)	JC66-40954A	1	X	
1-9	IPR-BRKT GEAR	JC70-00251A	1	X	
1-S9	SCREW-TAPTITE	6003-000266	5	X	
2	MEA HOU-GUIDE LOWER SCF	JC97-01825A	1	X	
2-1	PMO-GUIDE LOWER RAIL(SCF)	JC72-01242A	1	X	
2-2	SPRING CS	TBD	2	X	
2-3	PMO-BUSH IDLE ROLL-SCF16	JC72-00658A	2	X	
2-4	PMO-HOLDER IDLE ROLL16	JC72-00660A	1	X	
2-5	PMO-COVER GUIDE LOWER(SCF)	JC72-01066A	1	X	
2-6	PMO-GUIDE LOWER(SCF)	JC72-01241A	1	X	
2-7	PMO-ROLLER IDLE(SCF)	JC72-01244A	1	X	
2-8	GREASE-BEARING	2050-001048	0.1	X	
2-S5	SCREW-TAPTITE	6003-000119	4	X	
3	MEA HOU-GUIDE UPPER SCF	JC97-01826A	1	X	
3-1	RING-E	6044-000231	1	X	
3-2	SPRING ETC-PICKUP	JC61-00482A	1	X	
3-3	GEAR-PICK UP	JC66-00326A	1	X	
3-4	GEAR-FEED (SCF)	JC66-40955A	1	X	
3-5	PMO-ACTUATOR EMPTY	JC72-00719A	1	X	
3-6	PMO-SHAFT PICK UP	JC72-00729A	1	X	
3-7	PMO-GUIDE UPPER(SCF)	JC72-01240A	1	X	
3-8	PMO-BEARING SHAFT	JC72-41191A	4	X	
3-9	"PMO-BUSHING_P/U,MP"	JC72-41364A	1	X	
3-10	RPR-RUBBER PICK UP	JC73-00086A	2	X	
3-11	RPR-ROLLER FEED SCF	JC73-00115A	1	X	
3-12	PBA SUB-SCF COVER SENSOR	JC92-01502A	1	X	
3-13	PBA SUB-SCF P_EMPTY SENSOR	JC92-01501A	1	X	
3-14	GREASE-BEARING	2050-001048	0.1	X	
4	FOOT-ML80	JC61-40001A	2	X	
5	CAM-CATCH	JC66-00050A	1	X	
6	IPR-PLATE GROUND(A)	JC70-00249A	1	X	
7	IPR-PLATE LOCKER(L)	JC70-00377A	1	X	
8	IPR-PLATE LOCKER(R)	JC70-00378A	1	X	

ITspares.eu

Frame SCF Ass'y Assembly Parts List

SA : Service Available
O : Service available **X** : Service not available

No.	Description	SEC.Code	Q'ty	SA	Remark
9	PMO-BASE DECO(SCF)	JC72-01065A	2	X	
10	ELA UNIT-TERMINAL TR L	JC96-01672A	4	X	
11	PMO-COVER TOP(SCF)	JC72-01209A	1	X	
12	PMO-DOOR SIDE(SCF)	JC72-01210A	1	X	
13	PMO-FRAME BASE(SCF)	JC72-01211A	1	X	
14	PMO-COVER SENSOR(SCF)	JC72-01235A	1	X	
16	CBF HARNESS-DRIVER GND	JB39-00065A	2	X	150 m/m
17	CBF HARNESS-SCF_8P	JC39-00102A	1	X	
19	PBA SUB-SCF	JC92-01539A	1	X	
S5	SCREW-TAPTITE	6003-000119	8	X	
S8	SCREW-TAPTITE	6003-000196	26	X	

IT-Spares.eu

9.13 Main Frame Exploded View

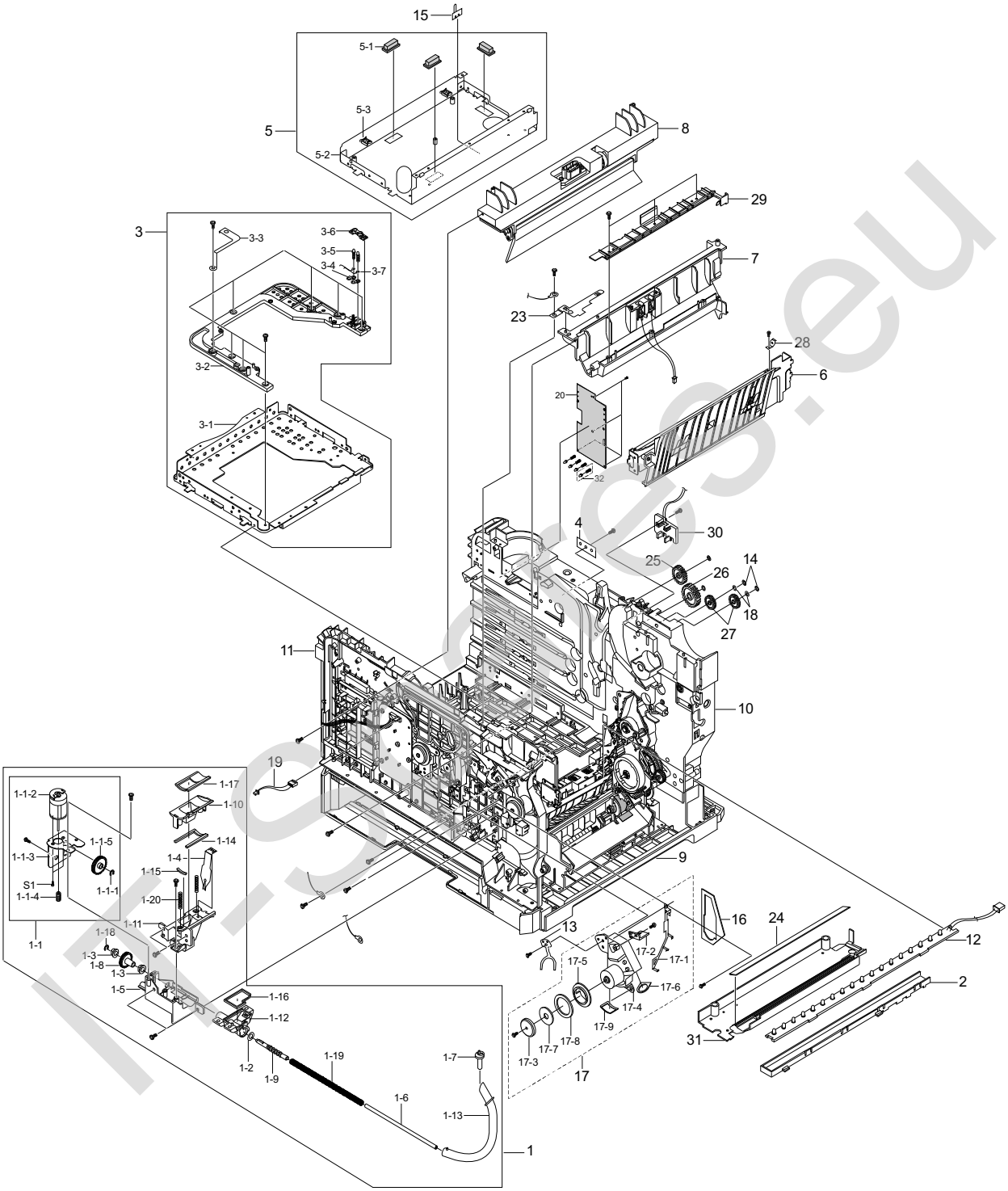

Main Frame Assembly Parts List

SA : Service Available
O : Service available X : Service not available

No.	Description	SEC.Code	Q'ty	SA	Remark
1	MEA UNIT-OPC TONER DUCT	JC97-01834A	1	X	
1-1	ELA UNIT-TONER MOTOR	JC96-02882A	1	O	
1-1-S1	SCREW-MACHINE	6001-000485	2	X	
1-1-1	RING-E	6044-000125	1	X	
1-1-2	MOTOR DC-WASTE TONER	JB31-00020B	1	O	
1-1-3	BRACKET-WASTER TONER MOTOR	JC61-00808A	1	X	
1-1-4	GEAR WORM-WHEEL IDLE	JC66-00653A	1	X	
1-1-5	GEAR WORM-WASTE TONER	JC66-00654A	1	X	
1-3	BUSH-D6/L4	JC61-00699A	2	X	
1-2	WASUER-PIAIN	6031-000023	1	X	
1-4	PLATE-VIBRATOR INLET	JC61-00810A	1	X	
1-5	BASE-M-WASTE TONER	JC61-00820A	1	X	
1-6	PIPE-WASTE BAR	JC62-00129A	1	X	
1-7	CAM-M-WASTE DUCT OUTLET	JC66-00649A	1	X	
1-8	GEAR WORM-WHEEL Z35	JC66-00651A	1	X	
1-9	SHAFT-M-WASTE DUCT INLET	JC66-00652A	1	X	
1-10	DUCT-M-WASTE LIFTER	JC67-00052A	1	X	
1-11	DUCT-M-WASTE TONER INLET1	JC67-00053A	1	X	
1-12	DUCT-M-WASTE TONER INLET2	JC67-00054A	1	X	
1-13	PMO-PIPE WASTE TRANSFER	JC72-01186A	1	X	
1-14	SPONGE-WASTE LIFTER 1	JC72-01278A	1	X	
1-15	SPONGE-WASTE LIFTER 2	JC72-01279A	1	X	
1-16	SPONGE-WASTE DUCT OPC	JC72-01285A	1	X	
1-17	SPONGE-WASTE COVER	JC72-01290A	1	X	
1-18	RING-E	6044-000125	1	X	
1-19	SPRING-CS	6107-001201	1	X	WASTE DUST OPC
1-20	SPRING-CS	6107-001199	2	X	ITB TONER LIFFER
1-S8	SCREW-TAPTITE	6003-000196	6	X	
2	HOLDER-ERASER	JC72-01218A	1	O	
3	MEA UNIT-LSU GUIDE BRKT	JC97-01810A	1	O	
3-1	IPR-BRKT LSU	JC70-00388A	1	O	
3-2	PMO-LSU BASE	JC72-01169A	1	O	
3-3	IPR-GROUND LSU	JC70-00444A	1	O	
3-4	IPR-PLATE OPC OEM	JC70-00428A	2	O	
3-5	MEA UNIT -TERMINAL S	JC97-01771A	2	X	
3-6	PMO-COVER OEM UPPER	JC72-01146A	1	O	
3-7	CBF HARNESS-OPC_FUSE	JC39-00229A	1	X	
3-S5	SCREW-TAPTITE	6003-000119	2	X	
3-S9	SCREW-TAPTITE	6003-000266	5	X	
4	SHEET-HV HARNESS	JC63-00248A	1	O	
5	MEA UNIT-BRKT HVPS	JC97-01767A	1	O	
5-1	GUIDE-HVPS BOARD	JC61-00838A	3	X	
5-2	IPR-BRKT HVPS LOWER	JC70-00386A	1	X	
5-3	CABLE CLMP	6502-000132	2	X	

ITSpares.eu

Main Frame Assembly Parts List

SA : Service Available
O : Service available X : Service not available

No.	Description	SEC.Code	Q'ty	SA	Remark
6	ELA UNIT-GUIDE PAPER T2	JC96-02797A	1	O	
7	ELA UNIT-DUMMY FUSER BASE	JC96-02795A	1	O	
8	ELA UNIT-ITB CAM	JC96-02794A	1	O	
9	ELA UNIT-FRAME BASE	JC96-02881A	1	O	
10	ELA UNIT-FRAME REAR	JC96-02880A	1	O	
11	ELA UNIT-FRAME FRONT	JC96-02879A	1	O	
12	PBA SUB-ERASER	JC92-01450A	1	O	
13	IPR-SHUTTER TORTION	JC70-00447A	1	O	
14	RING-CS	6044-000001	4	X	
15	CABLE CLAMP	6502-000121	1	X	
16	SPONGE-DUST OPC COVER	JC72-01284A	1	X	
17	MEA UNIT-OPC TONER HOUSING	JC97-01814A	1	X	
17-1	PLATE-VIBRATOR OUTLET	JC61-00885A	1	X	
17-2	BUSH-M-WASTE CAM	JC61-00812A	1	X	
17-3	PMO-CAP SHUTTER ITB	JC72-01222A	1	X	
17-4	PMO-HOUSING TRANSFER	JC72-01228A	1	X	
17-5	PMO-SHUTTER TRANSFER OPC	JC72-01230A	1	X	
17-6	SPONGE-TANK TONER	JC72-01289A	1	X	
17-7	SPONGE-CAP SHUTTER	JC72-01292A	1	X	
17-8	SPONGE-DUCT TONER OPC	JC72-01294A	1	X	
17-9	SPONGE-TANK TONER OPC	JC72-01295A	1	X	
17-S5	SCREW-TAPTITE	6003-000119	2	X	
17-S8	SCREW-TAPTITE	6003-000196	1	X	
18	SPRING ETC-CLUTCH	JB61-70922A	2	X	
19	CBF HARNESS-WASTE_MOTOR	JC39-00299A	1	X	
20	ELA UNIT-DEVE DRIVE	JC96-02930A	1	O	
21	CBF HARNESS-MAIN FSR_ROLL	JC39-00276A	1	O	
22	CBF HARNESS-MAIN ERASER	JC39-00277A	1	O	
23	GROUND-FUSER FRAME	JC63-00165A	1	X	
24	SHEET-ERASER LAMP	JC63-00247A	1	O	
25	GEAR-GEAR FUSER DRV OUTER	JC66-00334A	1	X	
26	“GEAR-DP,IDLE”	JC66-40911A	1	X	
27	“GEAR-EXIT,IDLE(Z17)”	JC66-40964A	2	X	
28	IPR-GROUND PAPER GUIDE	JC70-00446A	1	O	
29	PMO-COVER FUSER BASE	JC72-01141A	1	O	
30	PMO-COVER HARNESS FUSER	JC72-01145A	1	O	
31	PMO-LSU SHUTTER COVER	JC72-01171A	1	O	
32	MEA UNIT-TERMINAL S	JC97-01771A	4	O	
S5	SCREW-TAPTITE	6003-000119	8	X	
S6	SCREW-TAPTITE	6003-000152	1	X	
S7	SCREW-TAPTITE	6003-000179	2	X	
S8	SCREW-TAPTITE	6003-000196	29	X	
S9	SCREW-TAPTITE	6003-000266	2	X	
S14	SCREW-TAPTITE	6003-001256	7	X	

ITspares.eu

9.14 Front Frame Exploded View

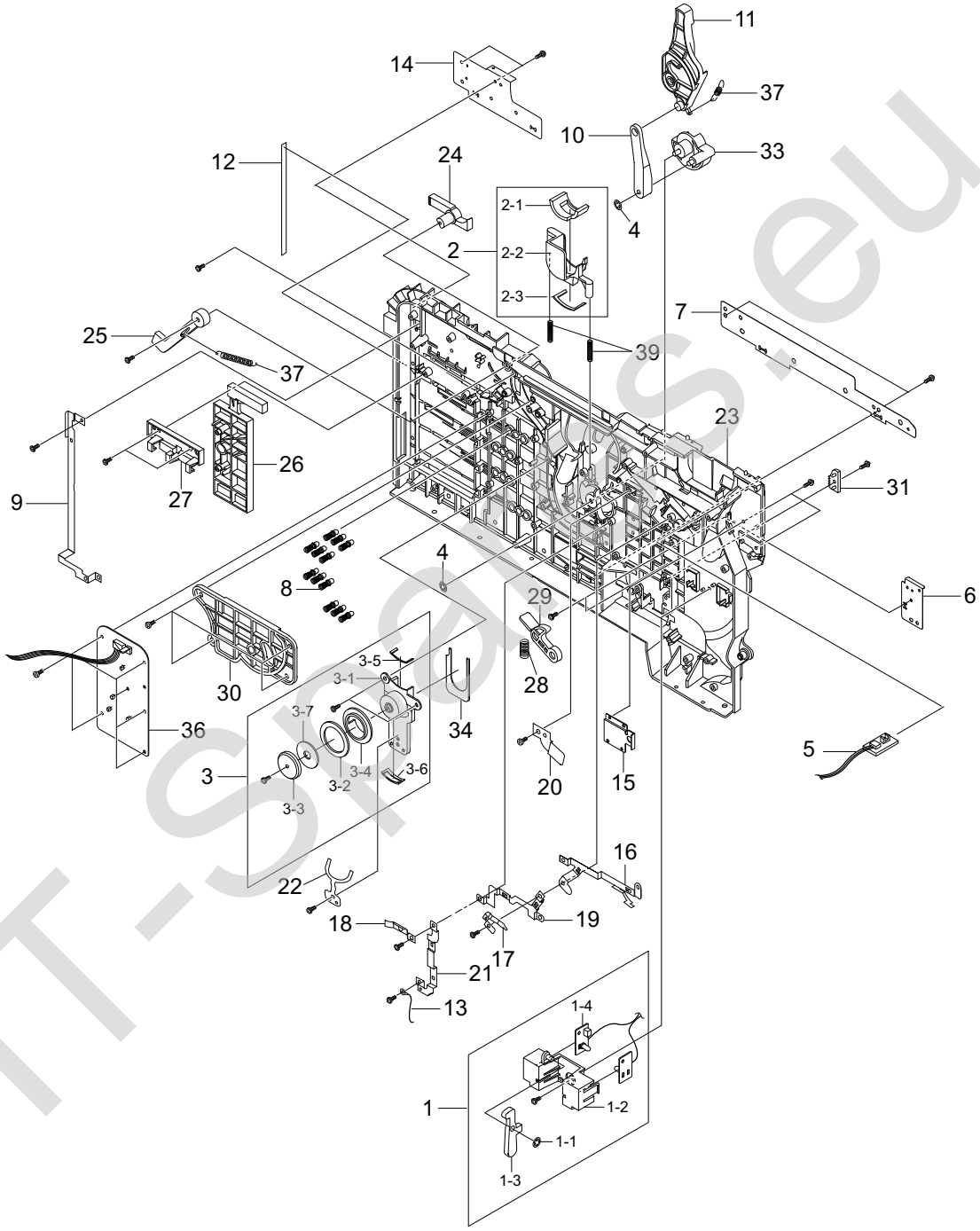

IT-Service.eu

Front Frame Assembly Parts List

SA : Service Available
O : Service available **X** : Service not available

No.	Description	SEC.Code	Q'ty	SA	Remark
0	ELA UNIT-FRAME FRONT	JC96-02879A	1	X	
1	ELA UNIT-TONER SENSOR	JC96-02796A	1	X	
1-1	RING-CS	6044-000001	1	X	
1-2	HOLDER-M-WASTE TONER SENSOR	JC61-00813A	1	X	
1-3	PMO-TONER DETACTER	JC72-01189A	1	X	
1-4	PBA SUB-WASTE SENSOR	JC92-01452A	1	O	
2	MEA UNIT-ITB LIFTER	JC97-01812A	1	O	
2-1	SPONGE-DUCT TONER ITB LIFT	JC72-01282A	1	X	
2-2	DUCT-TONER ITB LIFTER	JC67-00043A	1	X	
2-3	SPONGE-ITB DUCT	JC72-01286A	1	X	
3	MEA UNIT-ITB TONER HOUSING	JC97-01813A	1	O	
3-1	HOUSING-M-WASTE TONER ITB	JC61-00814A	1	O	
3-2	SPONGE-DUCT TONER OPC	JC72-01294A	1	X	
3-3	PMO-CAP SHUTTER ITB	JC72-01222A	1	X	
3-4	PMO-SHUTTER TRANSFER ITB	JC72-01229A	1	X	
3-5	SPONGE-ITB TANK DUST	JC72-01287A	1	X	
3-6	SPONGE-ITB TANK TONER	JC72-01288A	1	X	
3-7	SPONGE-CAP SHUTTER	JC72-01292A	1	X	
3-S8	SCREW-TAPTITE	6003-000196	1	X	
4	RING-CS	6044-000001	3	X	
5	PBA SUB-EXIT SENSOR	JC92-01454A	1	X	
6	PLATE-GUIDE T2 FRONT	JC61-00709A	1	X	
7	BRACKET-DUMMY LSU F	JC61-00756A	1	X	
8	MEA UNIT-TERMINAL S	JC97-01771A	12	X	
9	GROUND-HVPS LSU	JC63-00166A	1	X	
10	LINK-LOCK OPC F	JC66-00562A	1	O	
11	LEVER-ITB LOCK FRONT	JC66-00666A	1	O	
12	LABEL(R)-COLOR BAR	JC68-01149A	1	X	
13	CBF HARNESS-BUSH GND	JC39-00114A	1	X	
14	IPR-BRKT GUIDE HVPS R	JC70-00385A	1	X	
15	IPR-BRKT EXIT HINGE F	JC70-00406A	1	O	
16	IPR-ITB HINGE GROUND	JC70-00419A	1	O	
17	IPR-ITB GUIDE TORSION	JC70-00420A	1	X	
18	IPR-OPC GUIDE TORSION	JC70-00421A	1	X	
19	IPR-OPC/ITB GROUND	JC70-00422A	1	X	
20	IPR-OPC LOCK FRONT	JC70-00423A	1	O	
21	IPR-OPC/LSU GROUND	JC70-00424A	1	X	
22	IPR-SHUTTER TORTION	JC70-00447A	1	X	
23	PMO-FRAME FRONT	JC72-01144A	1	X	

ITspares.eu

Front Frame Assembly Parts List

SA : Service Available
O : Service available **X** : Service not available

No.	Description	SEC.Code	Q'ty	SA	Remark
24	PMO-COVER TOP LEVER IN	JC72-01173A	1	O	
25	PMO-COVER TOP LEVER OUT	JC72-01174A	1	X	
26	PMO-DEVE OPEN PLATE	JC72-01177A	1	O	
27	PMO-DEV OPEN PLATE GUIDE	JC72-01178A	1	O	
28	SPRING-CS	6107-001196	1	X	ITB LOCK
29	PMO-LOCK ITB FRONT	JC72-01184A	1	O	
30	PMO-LOCK COVER FRONT	JC72-01185A	1	O	
31	PMO-RACK OPC	JC72-01221A	1	O	
32	SPRING-CS	6107-001199	2	X	ITB TONER LIFTER
33	PMO-GUIDE LOCK OPE F	JC72-01225A	1	O	
34	SPONGE-DUST ITB COVER	JC72-01283A	1	O	
36	PBA SUB-DEVE_OEM_KEY	JC92-01533A	1	O	
37	SPRING-CS	6107-001214	2	X	FRAME LOCK
S5	SCREW-TAPTITE	6003-000119	6	X	
S7	SCREW-TAPTITE	6003-000266	6	X	
S8	SCREW-TAPTITE	6003-000196	26	X	

IT-Spares.eu

9.15 Rear Frame Exploded View

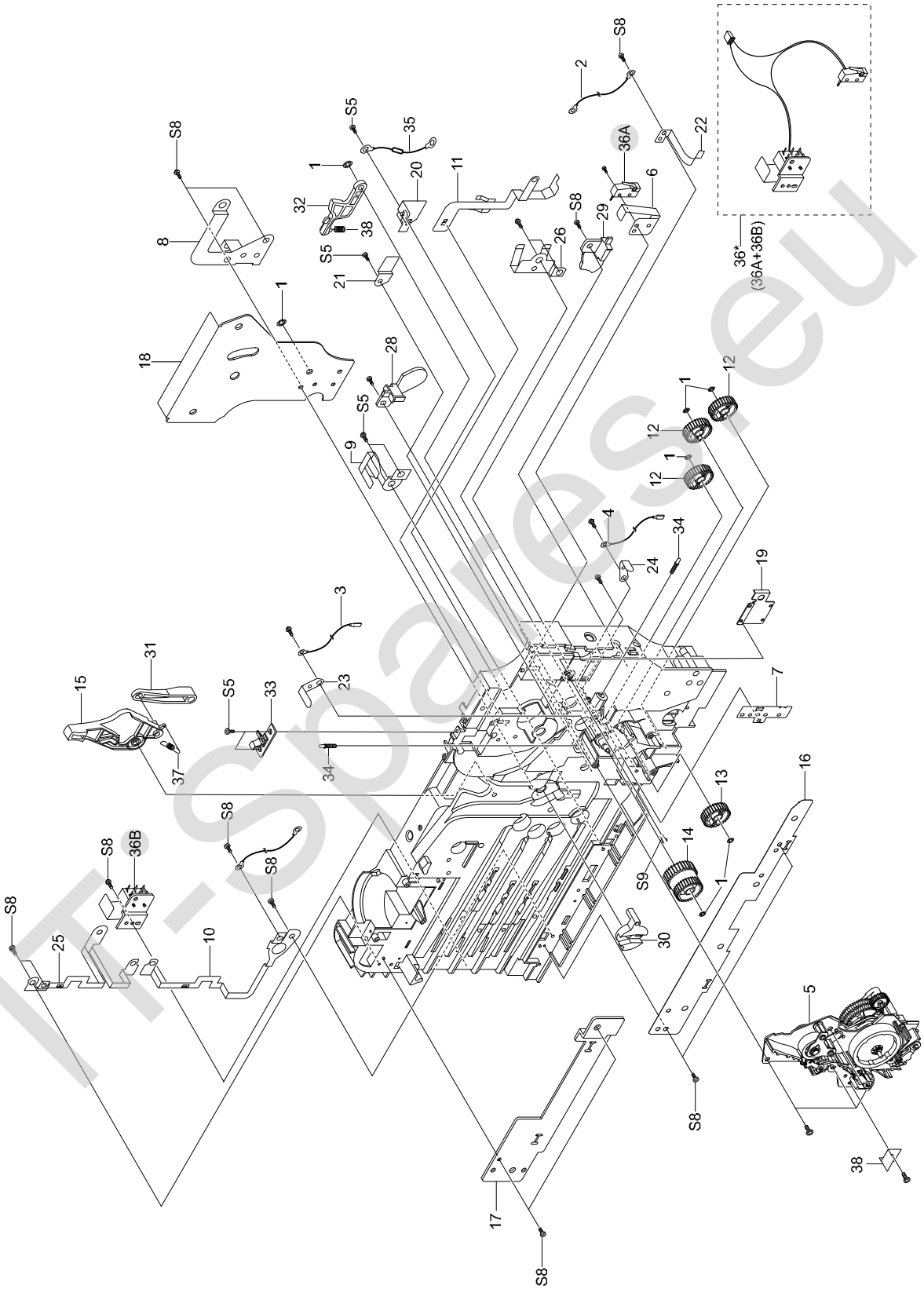

IT-Spares.eu

Rear Frame Assembly Parts List

SA : Service Available
O : Service available **X** : Service not available

No.	Description	SEC.Code	Q'ty	SA	Remark
0	ELA UNIT-FRAME REAR	JC96-02880A	1	X	
1	RING-CS	6044-000001	7	X	
2	CBF HARNESS-HVPS_CHARGE	JC39-00264A	1	O	
3	CBF HARNESS-HVPS_T1	JC39-00265A	1	O	
4	CBF HARNESS-HVPS_T2	JC39-00266A	1	O	
5	MEA UNIT-FEED	JC97-01829A	1	O	
6	PLATE-S/W DUPLEX	JC61-00707A	1	O	
7	PLATE-GUIDE T2 REAR	JC61-00708A	1	O	
8	GROUND-MAIN ITB DEVE	JC63-00162A	1	O	
9	GROUND-LSU DEVE DRIVE	JC63-00163A	1	O	
10	GROUND-HVPS LSU LOWER	JC63-00181A	1	O	
11	GROUND-EXIT DRIVE	JC63-00208A	1	O	
12	GEAR-RDCN FEED OUTER	JC66-00343A	3	O	
13	GEAR-T2 IDEL_Z27	JC66-00484A	1	O	
14	GEAR-T2 RDCN_Z32/Z23	JC66-00485A	1	O	
15	LEVER-ITB LOCK REAR	JC66-00667A	1	O	
16	IPR-BRKT DUMMY LSU R	JC70-00381A	1	O	
17	IPR-BRKT GUIDE HVPS F	JC70-00384A	1	O	
18	IPR-BRKT LOCK ITB	JC70-00387A	1	O	
19	IPR-BRKT EXIT HINGE R	JC70-00407A	1	O	
20	IPR-PLATE FUSER	JC70-00425A	1	O	
21	IPR-PLATE LOCK ITB	JC70-00426A	1	O	
22	IPR-PLATE OPC HV	JC70-00427A	1	O	
23	IPR-PLATE T1	JC70-00431A	1	O	
24	IPR-PLATE T2	JC70-00432A	1	O	
25	IPR-GROUND HVPS	JC70-00443A	1	O	
26	IPR-GROUND MAIN	JC70-00445A	1	O	
27	PMO-FRAME REAR	JC72-01143A	1	O	
28	PMO-COVER T1 HV	JC72-01148A	1	O	
29	PMO-COVER T2 HV	JC72-01149A	1	O	
30	PMO-GUIDE LOCK OPC	JC72-01157A	1	O	
31	PMO-LINK LOCK OPC	JC72-01158A	1	O	
32	PMO-LOCK ITB	JC72-01168A	1	O	
33	PMO-HOLDER GUIDE EXIT UP	JC72-01216A	1	O	
34	MEA UNIT-TERMINAL S	JC97-01771A	2	X	
35	CBF HARNESS-100M_GNDS	JC39-00302A	1	X	
36	ELA UNIT-COVER OPEN SENSOR	JC96-02876A	1	O	
37	SPRING-ES	6107-001214	1	X	
38	SPRING-CS	6107-001196	1	X	
S5	SCREW-TAPTITE	6003-000119	6	X	
S6	SCREW-TAPTITE	6003-000152	1	X	
S8	SCREW-TAPTITE	6003-000196	42	X	
S9	SCREW-TAPTITE	6003-000266	6	X	

ITspares.eu

9.16 Base Frame Exploded View

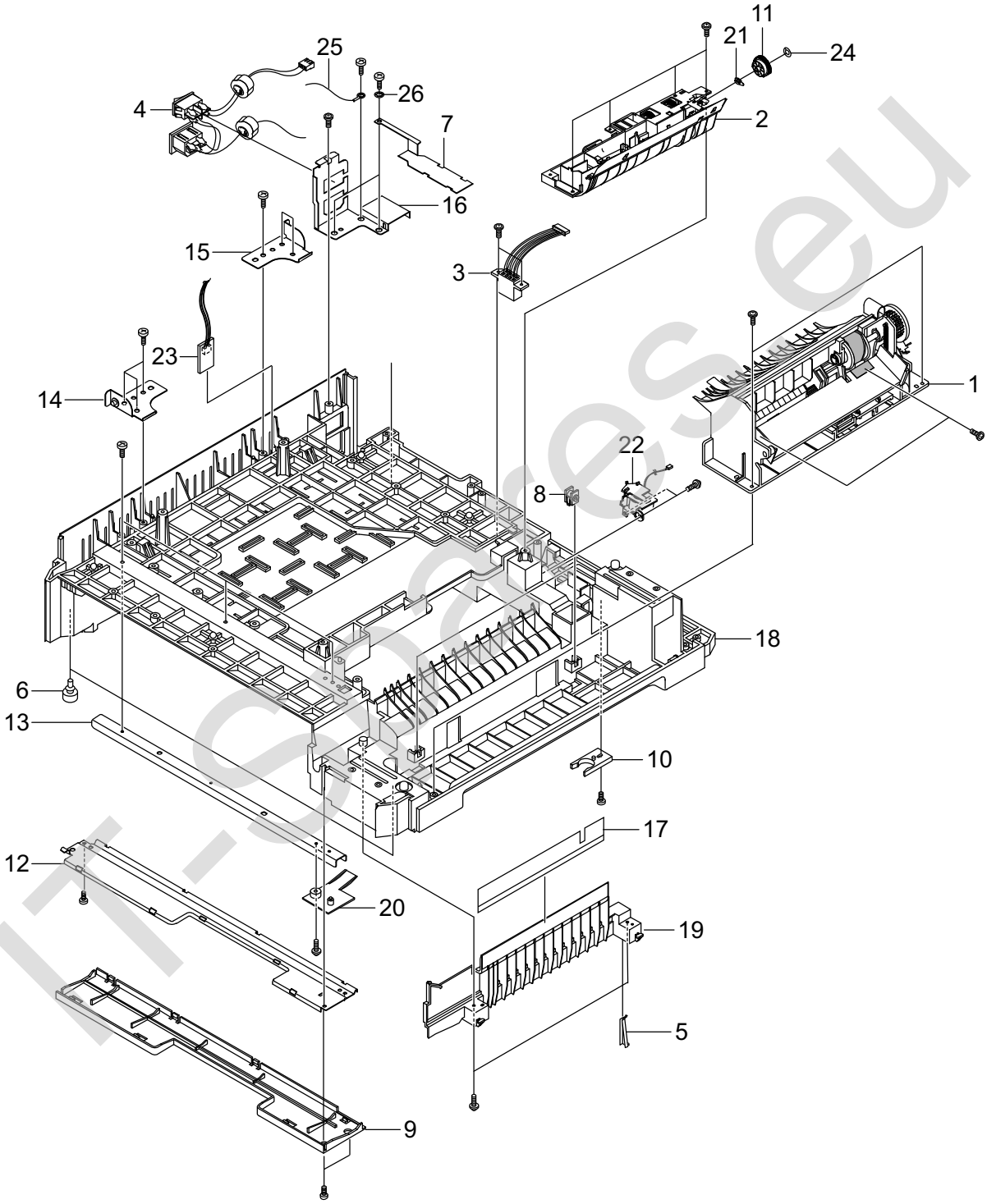

IT-Schematics.eu

Base Frame Assembly Parts List

SA : Service Available
O : Service available **X** : Service not available

No.	Description	SEC.Code	Q'ty	SA	Remark
0	ELA UNIT-FRAME BASE	JC96-02881A	1	X	
1	ELA UNIT-MP	JC96-02774A	1	O	
2	MEA-PICKUP	JC97-01755A	1	O	
3	CBF HARNESS-SCF	JC39-00082A	1	O	
4	CBF HARNESS-SMPS_INLET	JC39-00280A	1	O	
5	PLATE-GUIDE RAIL	JC61-00710A	1	O	
6	FOOT-ML80	JC61-40001A	2	O	
7	GROUND-SCF	JC63-00167A	1	O	
8	COVER-SCREW LOCKING MP	JC63-00175A	2	O	
9	COVER-M-BASE BAR	JC63-00207A	1	O	
10	CAM-CATCH	JC66-00050A	1	O	
11	GEAR-PICK_UP	JC66-00335A	1	O	
12	IPR-BRKT BASE BAR	JC70-00379A	1	O	
13	IPR-CHANNEL FRAME BASE	JC70-00390A	1	O	
14	IPR-BRKT DEVE HINGE F	JC70-00404A	1	O	
15	IPR-BRKT DEVE HINGE R	JC70-00405A	1	O	
16	IPR-BRKT POWER	JC70-00414A	1	O	
17	PPR-SHEET/GUIDE PAPER	JC72-00836A	1	O	
18	PMO-FRAME BASE	JC72-01156A	1	O	
19	PMO-GUIDE SCT PAPER	JC72-01161A	1	O	
20	PMO-PAPER GUIDE	JC72-01172A	1	O	
21	PMO-BEARING SHAFT	JC72-41191A	1	O	
22	SOLENOID-PICK UP	JC33-00007B	1	O	
23	PBA SUB-TEMP	JC92-01535A	1	O	
24	WASHER-PLAIN	6031-001255	1	X	
25	CBF HARNESS-LIU GND	JB39-00103A	1	X	
26	WASHER-E.T	6031-000120	1	X	
S7	SCREW-TAPTITE	6003-000266	4	X	
S8	SCREW-TAPTITE	6003-000196	13	X	
S14	SCREW-TAPTITE	6003-001256	14	X	

IT-Spares.eu

9.17 MP Ass'y Exploded View

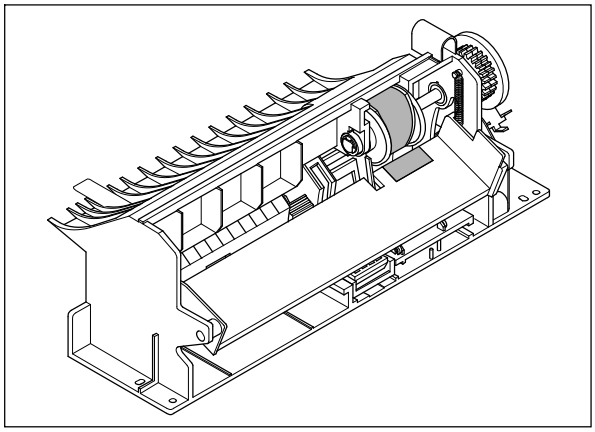

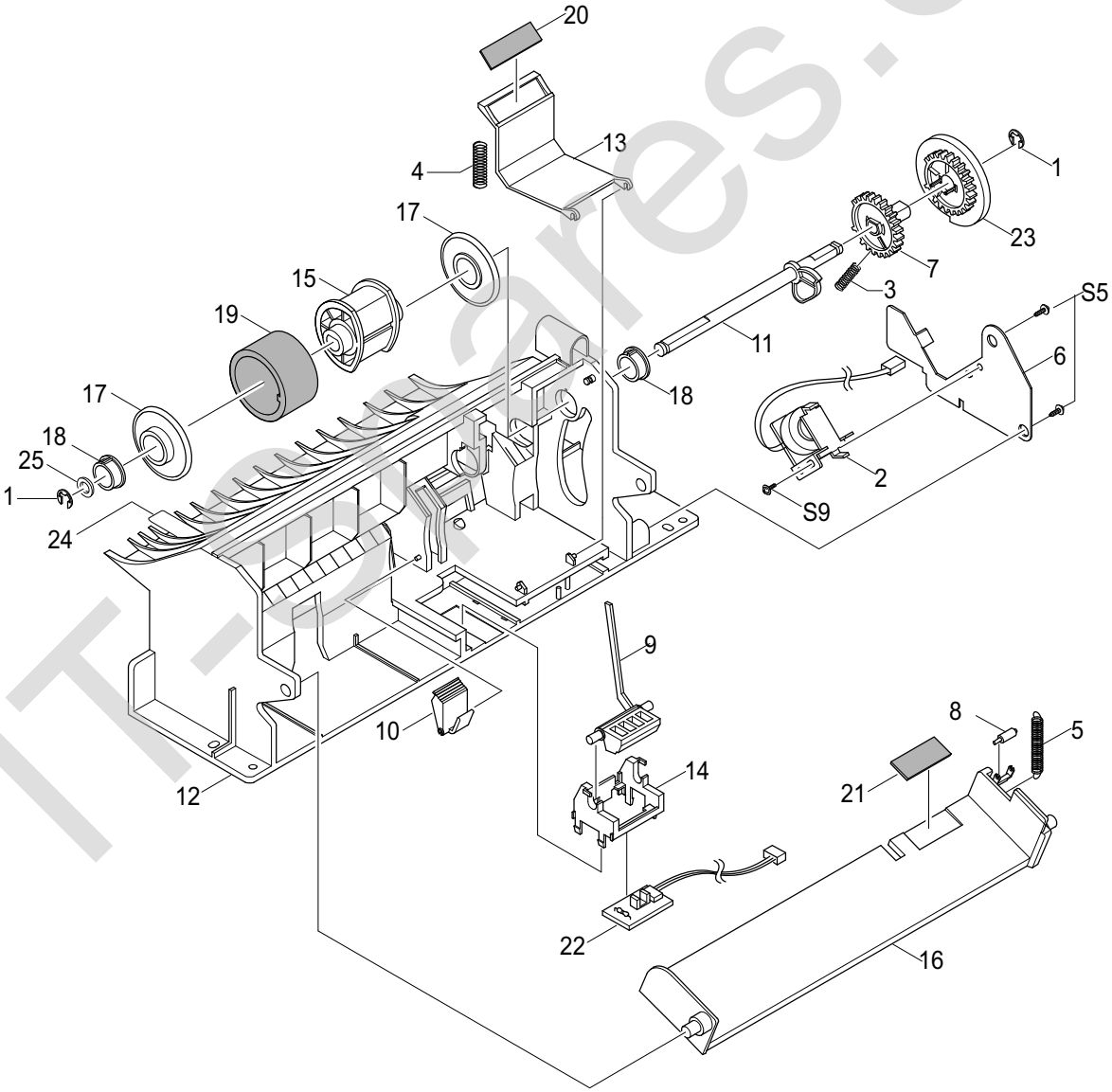

IT-spares.eu

MP Ass'y Assembly Parts List

SA : Service Available
O : Service available **X** : Service not available

No.	Description	SEC.Code	Q'ty	SA	Remark
0	ELA UNIT-MP	JC96-02774A	1	O	
1	RING-E	6044-000125	2	X	
2	SOLENOID-MP	JC33-00006B	1	O	
3	SPRING ETC—CAM MP	JC61-00003A	1	O	
4	SPRING ETC-PICK UP MP	JC61-00041A	1	O	
5	SPRING ETC-KNOCKUP,MP	JC61-00483A	1	O	
6	IPR-BRACKET SOLENOIDE	JC70-00237A	1	O	
7	PMO-HOLDER CAM MPF	JC72-00055A	1	O	
8	PMO-ROLLER CAM.MP	JC72-00761A	1	O	
9	PMO-ACTUATOR,MP	JC72-00767A	1	O	
10	PMO-ADJUSTER,MP	JC72-00768A	1	O	
11	PMO-CAM PICK UP,MP	JC72-00769A	1	O	
12	PMO-FRAME,MP	JC72-00770A	1	O	
13	PMO-HOLDER PAD,MP	JC72-00771A	1	O	
14	PMO-HOLDER SENSOR,MP	JC72-00772A	1	O	
15	PMO-HOUSING PICK UP,MP	JC72-00773A	1	O	
16	PMO-PLATE KNOCK UP,MP	JC72-00775A	1	O	
17	PMO-IDLE PICK UP MP	JC72-41027A	2	O	
18	PMO-BUSHING_P/U,MP	JC72-41364A	2	O	
19	RPR-RUBBER PICK UP,MP	JC73-00089A	1	O	
20	PAD-MP(PLUS)	JC69-00494A	1	X	
21	RPR-PAD KNOCK UP MP	JC73-10906A	1	X	
22	PBA SUB-MP_EMPTY SENSOR	JC92-01500A	1	O	
23	PMO-GEAR P/U MPF	JC72-00056A	1	X	
24	SHEET-PAPER MP	JC63-00240A	1	X	
25	WASHER-PLAIN	6031-000023	1	X	
S5	SCREW-TAPTITE	6003-000119	2	X	
S9	SCREW-TAPTITE	6003-000266	1	X	

IT-Spares.eu

9.18 Pick-up Ass'y Exploded View

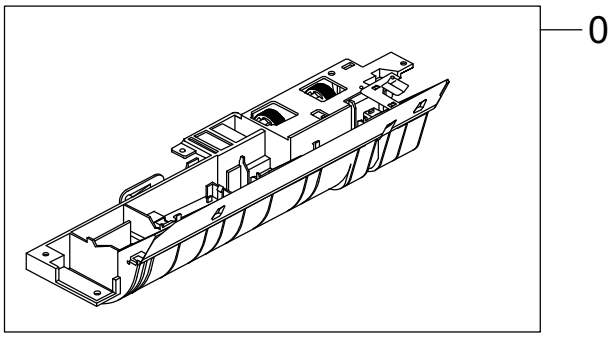

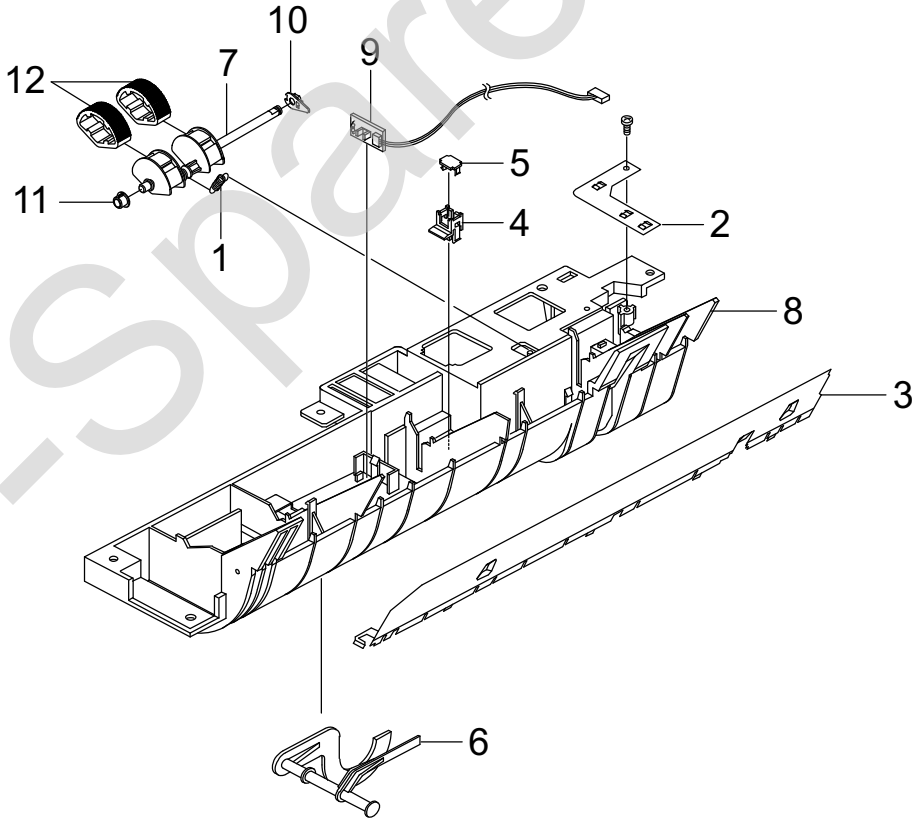

IT-Spares.eu

Pick-up Ass'y Assembly Parts List

SA : Service Available
O : Service available **X** : Service not available

No.	Description	SEC.Code	Q'ty	SA	Remark
0	MEA-PICKUP	JC97-01755A	1	O	
1	SPRING ETC-PICKUP	JC61-00482A	1	O	
2	IPR-GROUND FEED	JC70-00359A	1	X	
3	IPR-GUIDE INPUT	JC70-00360A	1	X	
4	PMO-CAP CONNECTOR L	JC72-00463A	1	O	
5	PMO-CAP CONNECTOR U	JC72-00465A	1	O	
6	PMO-ACTUATOR EMPTY	JC72-00719A	1	O	
7	PMO-SHAFT PICK UP	JC72-00729A	1	O	
8	PMO-GUIDE PAPER	JC72-01076A	1	O	
9	PBA SUB-P.EMPTY SENSOR	JC92-01453A	1	O	
10	PMO-BEARING SHAFT	JC72-41191A	1	O	
11	"PMO-BUSHING_P/U,MP"	JC72-41364A	1	O	
12	RUBBER-PICK UP	JC73-00149A	2	O	

IT-Spares.eu

9.19 Feeder Ass'y Exploded View

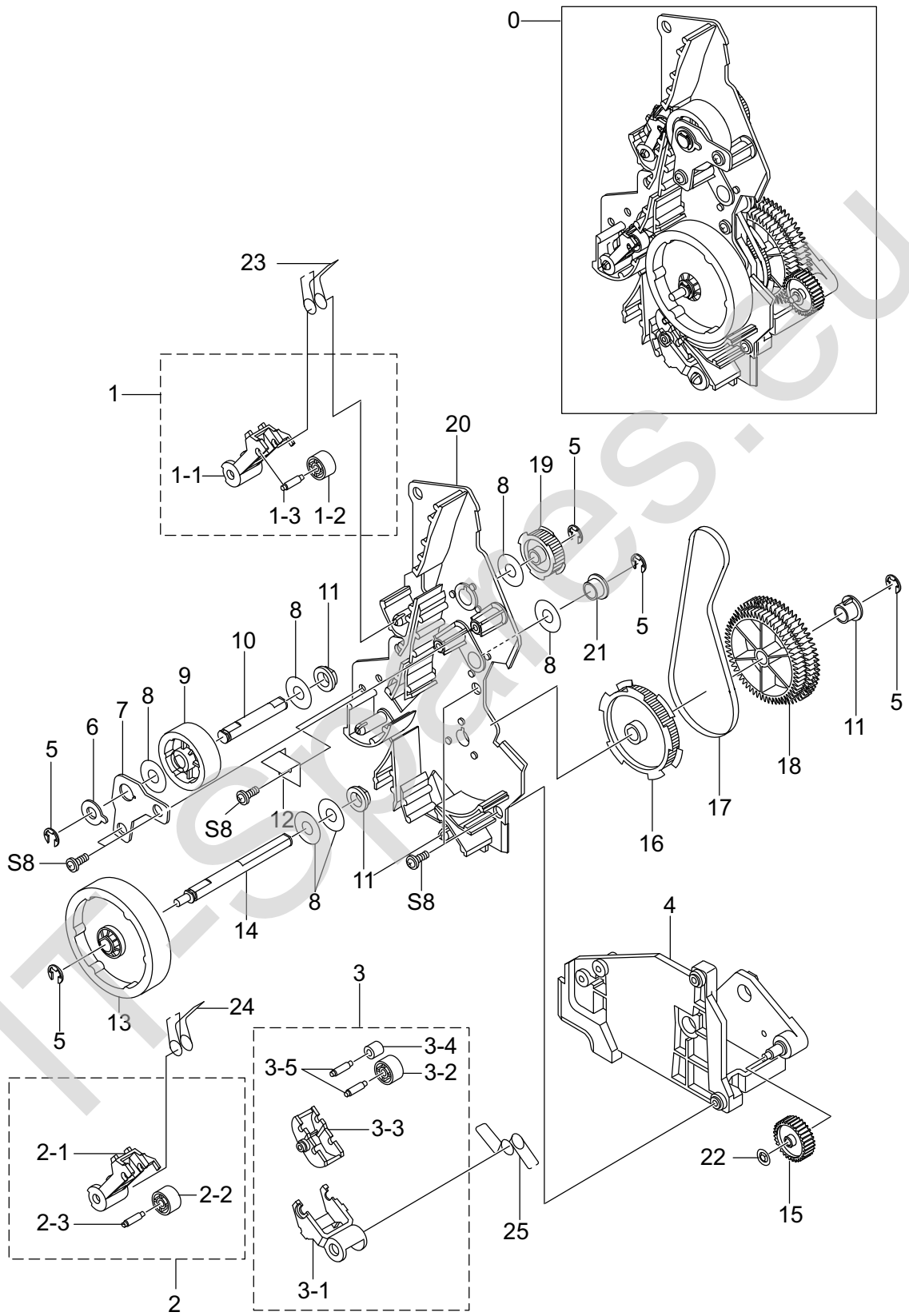

IT-spares.eu

Feeder Ass'y Assembly Parts List

SA : Service Available
O : Service available X : Service not available

No.	Description	SEC.Code	Q'ty	SA	Remark
0	MEA UNIT-FEED	JC97-01829A	1	O	
1	MEA-HOLDER PINCH C3	JC97-01768A	1	O	
1-1	PMO-HOLDER PINCH C3	JC72-01107A	1	X	
1-2	PMO-ROLLER FEED L	JC72-40261A	1	X	
1-3	IPR-SHAFT FEED IDLER	JC70-10230A	1	X	
2	MEA-HOLDER PINCH C5	JC97-01769A	1	O	
2-1	PMO-HOLDER PINCH C5	JC72-01108A	1	O	
2-2	PMO-ROLLER FEED L	JC72-40261A	1	X	
2-3	IPR-SHAFT FEED IDLER	JC70-10230A	1	X	
3	MEA-HOLDER PINCH M	JC97-01770A	1	O	
3-1	PMO-HOLDER PINCH M	JC61-00778A	1	O	
3-2	PMO-ROLLER FEED L	JC72-40261A	1	O	
3-3	PMO-SUB HOLDER FEED	JC72-40266A	1	O	
3-4	PMO-ROLLER FEED S	JC72-40262A	1	O	
3-5	IPR-SHAFT FEED IDLER	JC70-10230A	2	O	
4	PMO-FRAME FEED	JC72-01106A	1	O	
5	RING-E	6044-000125	4	X	
6	PMO-BUSHING FEED MID	JC72-01105A	1	O	
7	IPR-BRKT FEED MID	JC70-00376A	1	O	
8	WASHER-PLAIN	6031-000021	6	X	
9	PMO-ROLLER FEED MID	JC72-01113A	1	O	
10	SHAFT-FEED MID	JC66-00618A	1	O	
11	PMO-BUSHING P/U.MP	JC72-41364A	3	O	
12	GROUND-PICKUP PLATE	JC63-00182A	1	O	
13	PMO-ROLLER FEED	JC72-00727A	1	O	
14	SHAFT-FEED	JC66-00617A	1	O	
15	GEAR-MP/DUP DRV	JC66-00346A	1	O	
16	PMO-PULLEY FEED L	JC72-01110A	1	O	
17	BELT-TIMING GEAR	6602-001176	1	O	
18	GEAR-FEED	JC66-00332A	1	O	
19	PMO-PULLEY FEED S	JC72-01111A	1	O	
20	PMO-BRKT FEED	JC72-01134A	1	O	
21	PMO-PULLEY IDLE	JC72-01112A	1	O	
22	RING-CS	6044-000001	1	X	
23	SPRING-ETC FEED MID	6107-001210	1	X	
24	SPRING ETC FEED MID A	6107-001211	1	X	
25	SPRING ETC-FEED MP	JC61-00481A	1	X	
S8	SCREW-TAPTITE	6003-000196	5	X	

ITspares.eu

9.20 Guide Paper T2 Ass'y Exploded View

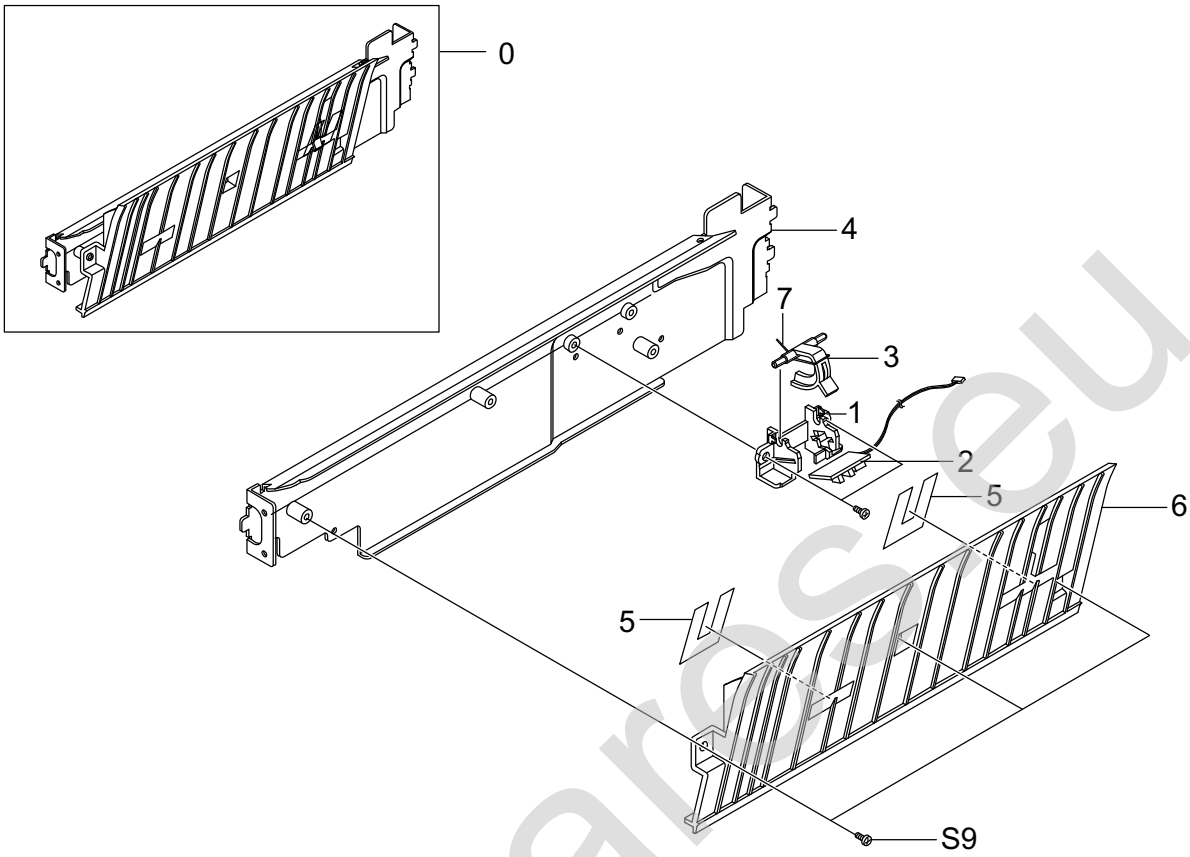

Guide Paper Assembly Parts List

SA : Service Available
O : Service available **X** : Service not available

No.	Description	SEC.Code	Q'ty	SA	Remark
0	ELA UNIT-GUIDE PAPER T2	JC96-02797A	1	O	
1	PMO-COVER FEED SENSOR	JC72-01139A	1	O	
2	PBA SUB-FEED SENSOR	JC92-01455A	1	O	
3	PMO-ACTUATOR FEED SENSOR	JC72-01135A	1	O	
4	IPR-BRKT PAPER GUIDE	JC70-00389A	1	O	
5	SHEET-PAPER GUIDE	JC63-00235A	2	O	
6	PMO-GUIDE PAPER PATH	JC72-01160A	1	O	
7	SPRING ETC-ACTUATOR	JC61-00050A	1	X	
S9	SCREW-TAPTITE	6003-000266	5	X	

ITSparesEu

9.21 ITB Cam Ass'y Exploded View

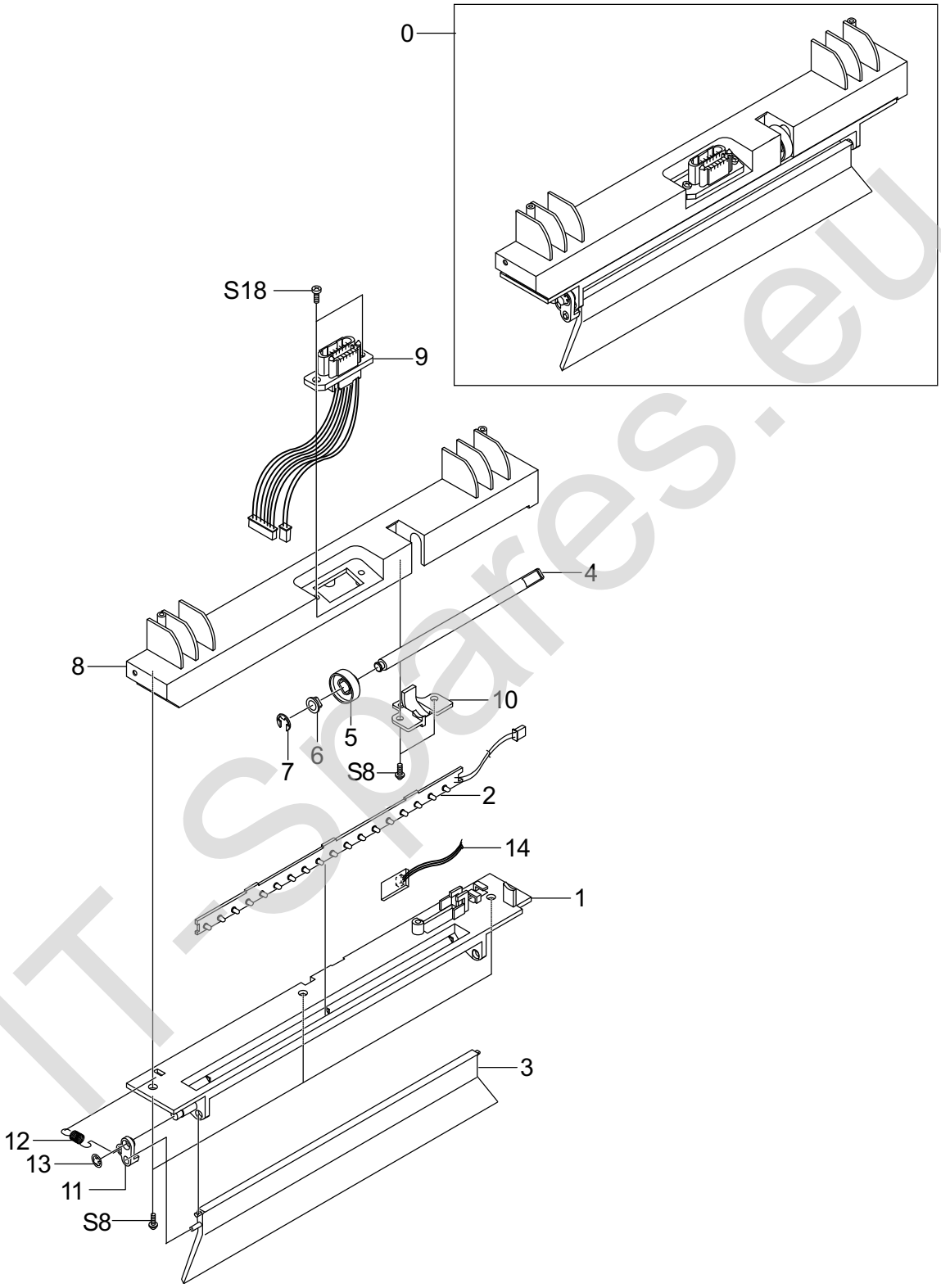

IT-Spares.eu

ITB Cam Ass'y Assembly Parts List

SA : Service Available
O : Service available **X** : Service not available

No.	Description	SEC.Code	Q'ty	SA	Remark
0	ELA UNIT-ITB CAM	JC96-02931A	1	X	
1	PMO-DUMMY ITB CAM LOWER	JC72-01154A	1	O	
2	PBA SUB-PTL	JC92-01451A	1	O	
3	PMO-PTL PATH	JC72-01187A	1	O	
4	SHAFT-ITB CLEAN CAM	JC66-00548A	1	O	
5	CAM-ITB CLEANING	JC66-00511A	1	O	
6	BUSH-D6/L4	JC61-00699A	1	O	
7	RING-E	6044-000125	1	X	
8	PMO-DUMMY ITB CAM UPPER	JC72-01155A	1	O	
9	ELA HOU-SET DRAWER	JC96-02888A	1	O	
10	PMO-COVER CAM SHAFT	JC72-01136A	1	O	
11	GUIDE-PTL SPRING	JC61-00717A	1	O	
12	SPRING-PTL	6107-001203	1	O	
13	RING-E S	6044-000001	1	X	
14	PBA SUB-TEMP_2	JC92-01538A	1	O	
S8	SCREW-TAPTITE	6003-000196	5	X	
S18	SCREW-SPECIAL	6009-001396	2	X	

IT-Spares.eu

9.22 Dummy Fuser Base Ass'y Exploded View

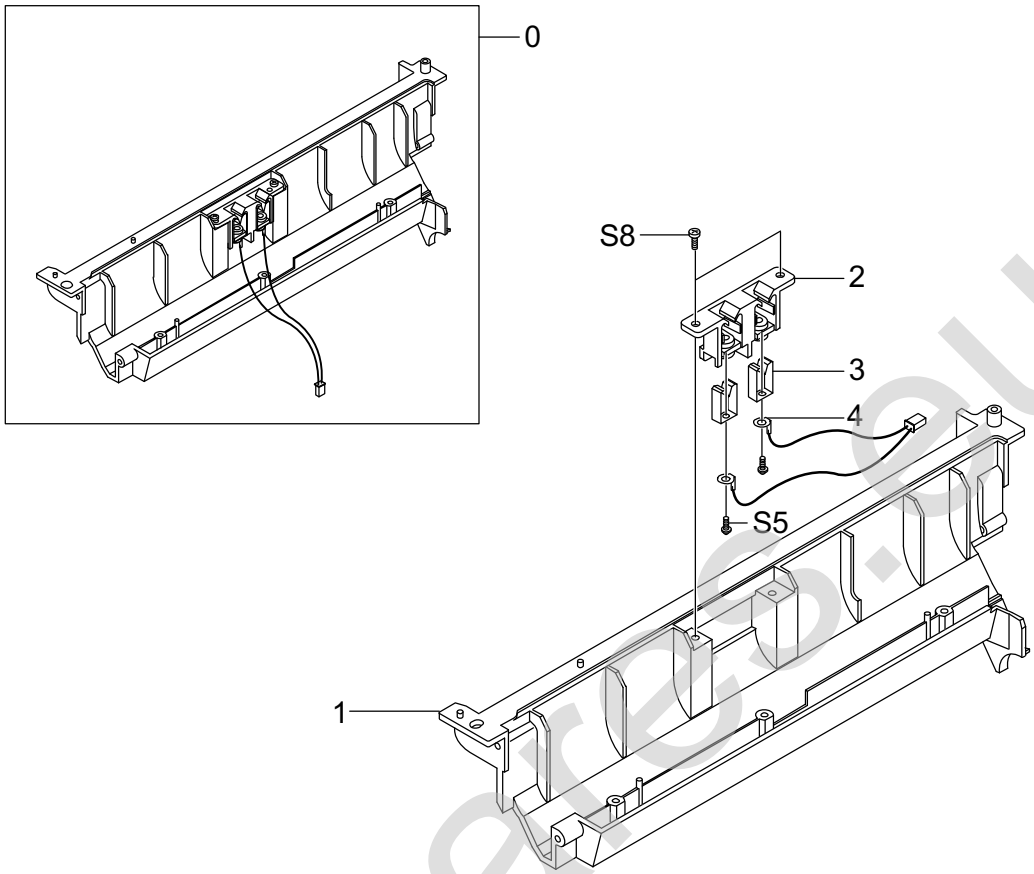

Dummy Fuser Base Ass'y Assembly Parts List

SA : Service Available
O : Service available **X** : Service not available

No.	Description	SEC.Code	Q'ty	SA	Remark
0	ELA UNIT-DUMMY FUSER BASE	JC96-02795A	1	X	
1	PMO-DUMMY FUSER BASE	JC72-01142A	1	O	
2	PMO-COVER FUSER AC	JC72-01140A	1	O	
3	IPR-TERMINAL FU	JC70-10961A	2	O	
4	CBF HARNESS-SMPS_AC WIRE	JC39-00288A	1	O	
S5	SCREW-TAPTITE	6003-000119	2	X	
S8	SCREW-TAPTITE	6003-000196	2	X	

IT-Spares.eu